WILLIAMSON COUNTY SUBDIVISION REGULATIONS

Adopted August 11, 1994

Effective Date: 01 Nov. '94

DISCLAIMER: The official copy of the
Williamson County Subdivision Regulations
is available for inspection at the
Williamson County Planning Department
offices. If you wish to be notified of
amendments to this text, please contact
the Williamson County Planning Department
at 615-790-5725.

TABLE OF CONTENTS

SECTION I I-1
1.1 Title I-1
1.2 Purpose I-1
1.3 Authority I-2
1.4 Jurisdiction I-2
1.5 Policy I-2
1.6 Enactment I-2
1.7 Interpretation, Conflict and Separability I-2
1.8 Saving Provisions I-3
1.9 Reservations and Appeals I-3
1.10 Amendments I-3
1.11 Conditions I-3
1.12 Resubdivision of Land I-4
1.13 Vacation of Plats I-4
1.14 Variances I-4
1.15 Enforcement I-5
1.16 Penalties I-5
SECTION II II-1
2.1 Usage II-1
2.2 Words and Terms Defined II-1
SECTION III III-1
3.1 General Procedure III-1
3.2 Specific Procedure III-6
SECTION IV IV-1
Surety For Completion and Maintenance of Improvements IV-1
Section 4.1: Completion of Improvements IV-1
Section 4.2: Performance Guarantees IV-1
Section 4.3: Maintenance Obligations IV-5
Section 4.4: Failure to Complete Improvements IV-7
Section 4.5: Acceptance of Dedication Offers IV-9
SECTION V V-1
5.1 General Improvements V-1
5.2 Lot Improvements V-3
5.3 Roads V-5
5.4 Drainage, Storm Sewers and Floodplain V-12
5.5 Water Facilities V-14
5.6 Sanitary Sewerage Facilities V-16
5.7 Sidewalks V-17
5.8 Street Lights V-18
5.9 Cable Utilities V-19
5.10 Public Uses V-19
5.11 Preservation of Natural Areas and Amenities V-20
APPENDICESForm 1, Appendix A 1

Form 1, Appendix A 2
Major Subdivision Concept Plan Review Checklist 2
Form 2, Appendix A 4
Subdivision Preliminary Plat Review Checklist 4
Form 3, Appendix A 6
Minor Subdivision Final Plat Review Checklist 6
Form 4, Appendix A 8
Major Subdivision Final Plat Review Checklist 8
Form 5, Appendix A 11
Agricultural Subdivision Final Plat Review Checklist 11
Form 6, Appendix A 13
Small Major Subdivision Final Plat Review Checklist 13
Form 7, Appendix A 16
Large Lot Subdivision Final Plat Review Checklist 16
Form 8, Appendix A 19
Minor Revision Final Plat Review Checklist 19
APPENDIX B-1 21
APPENDIX B-2 22
APPENDIX B-2A 23
APPENDIX B-3 24
CERTIFICATE OF OWNERSHIP AND DEDICATION 24
APPENDIX B-4 25
CERTIFICATE OF ACCURACY 25
APPENDIX B-5 26
Certification of General Approval for Installation of Subsurface 26
Sewage Disposal Systems with Restrictions 26
APPENDIX B-6 27
CERTIFICATION OF THE APPROVAL OF STREETS 27
APPENDIX B-7 28
CERTIFICATE OF APPROVAL OF UTILITY SYSTEMS 28
APPENDIX B-8 29
CERTIFICATE OF APPROVAL FOR RECORDING 29
APPENDIX B-9 30
PRIVATE DRIVEWAY NOTATION 30
APPENDIX B-l0 31
CERTIFICATE FOR ADDRESSES 31
APPENDIX C-l 32
WATER LETTER FOR MAJOR SUBDIVISIONS 32
APPENDIX C-2 33
WATER LETTER FOR MINOR SUBDIVISIONS 33
APPENDIX E 35
PERMIT BOND 35
APPENDIX F 37
I. GENERAL PROCEDURE 39
II. ROAD CLASSIFICATION - BY USE 40

III. ROADWAY CONSTRUCTION PLAN REQUIREMENTS FOR NEW SUBDIVISION DEVELOPMENTS IN WILLIAMSON COUNTY, TENNESSEE 41
IV. SPECIFICATIONS FOR MATERIALS AND CONSTRUCTION PROCEDURES 45
V. ACCEPTANCE AND BONDING 54
APPENDIX G 90

SECTION I

GENERAL

1.1 Title

These regulations shall be hereafter known, cited and referred to as the Subdivision Regulations of Williamson County, Tennessee.

1.2 Purpose

These regulations are adopted for the following purpose, in accordance with the laws of the State of Tennessee, Sections 13-3-101, 13-3-103 through 13-3-105, and 13-3-401 through 13-3-411, Tennessee Code Annotated.

1. To protect and provide for the public health, safety and general welfare of the county.

2. To guide the future growth and development of the county in accordance with the Comprehensive Plan or any other adopted plan.

3. To provide for adequate light, air and privacy, to secure safety from fire, flood and other danger, and to prevent overcrowding of the land and undue congestion of population.

4. To protect the character and the social and economic stability of all parts of the county and to encourage the orderly and beneficial development to all parts of the county.

5. To protect and conserve the value of land throughout the county and the value of buildings and improvements upon the land, and to minimize the conflicts among the uses of land and buildings.

6. To guide public and private policy and action in order to provide adequate and efficient transportation, water, sewerage, schools, parks, playgrounds, recreation, and other public requirements and facilities.

7. To establish reasonable standards of design and procedures for subdivisions and resubdivisions, in order to further the orderly layout and use of land, reduce traffic congestion; and to insure proper legal descriptions and monumenting of subdivided land.

8. To ensure that public facilities are available and will have a sufficient capacity to serve the proposed subdivisions.

9. To prevent the pollution of air, streams, and ponds; to assure the adequacy of drainage facilities; to safeguard the water table; and to encourage the wise use and management of natural resources throughout the county in order to preserve the integrity, stability, and

beauty of the community and the value of the land.

10. To preserve the natural beauty and topography of the county and to-ensure appropriate development with regard to these natural features.

1.3 Authority

The Subdivision Regulations of Williamson County are adopted under the authority granted by Sections 13-3-101, 13-3-103 through 13-3-105, and 13-3-401 through 13-3-411, Tennessee Code Annotated.

1.4 Jurisdiction

1. The Subdivision Regulations of Williamson County shall govern all subdivision of land within unincorporated Williamson County.

2. No building permit or certificate of occupancy shall be issued for any parcel or plat of land which was created by subdivision after the effective date of, and not in conformity with, the provisions of these subdivision regulations, and no construction of any private or public improvements shall take place or be commenced except in conformity with these regulations.

1.5 Policy

1. It is hereby declared to be the policy of Williamson County to consider the subdivision of land and the subsequent development of the subdivided plat as subject to the control of the county pursuant to the official comprehensive plan of the county for the orderly, planned, efficient and economical development of the county.

2. The existing and proposed public improvements shall conform to and be properly related to the proposals shown in the Comprehensive Plan, Official Map, and the Capital Budget and programs of the county, and it is intended that these regulations shall supplement and facilitate the enforcement of the provisions and standards contained in the Zoning Resolution, Comprehensive Plan Official Map, and Land Use Plan, and Capital Budget and programs of Williamson County.

1.6 Enactment

In order that land may be subdivided in accordance with these purposes and policies, these subdivision regulations are hereby adopted.

1.7 Interpretation, Conflict and Separability

1. In their interpretation and application, the provisions of these regulations shall be held to be the minimum requirements for promotion of the public health, safety and general

welfare.

2. It is established that these regulations are not intended to interfere with, abrogate or annul any regulations, statutes or laws In any case where these regulations impose restrictions different from those imposed by any other provision of these regulations, or any other regulation, law or statute, whichever provisions are more restrictive or impose higher standards shall control.

3. It is established that these regulations are not intended to abrogate any easement covenant or any other private agreement or restriction, provided that where the provisions of these regulations are more restrictive or impose higher standards than such easement, covenant, or other private agreement or restriction, the requirements of these regulations shall govern.

4. If any part or provision of these regulations or application thereof is adjudged invalid by any court of competent jurisdiction, such judgment shall be confined in its operation to the part, provision or application directly involved in all controversy in which such judgment was rendered. The remainder of these regulations shall be considered valid and in force.

1.8 Saving Provisions

These regulations shall not be construed as altering, modifying, vacating or nullifying any action now pending or any rights or obligations obtained by any person, firm, or corporation by lawful action of the county prior to the adoption of these regulations.

1.9 Reservations and Appeals

Upon the adoption of these regulations according to law, the Subdivision Regulations of Williamson County adopted June 19, 1980, as amended, are hereby repealed.

1.10 Amendments

These regulations may be amended as the public health, safety and general welfare require. A public hearing on all such amendments shall be held by the Planning Commission in a manner provided by 13-3-403, Tennessee Code Annotated.

1.11 Conditions

Regulation of the subdivision of land and the requirement of reasonable conditions to land subdivision is an exercise of valid police power delegated by the state to the county. The applicant must comply with such conditions outlined in these regulations in order to conform to the physical and economical development as well as the safety and general welfare of the planning region's present and future population.

1.12 Resubdivision of Land

1. For any change in a map of an approved or recorded subdivision plat, if such change affects any street layout shown on such map, or area reserved thereon for public use, or any lot line, or if it affects any map or plan legally reached prior to the adoption of any regulations controlling subdivisions, such parcel shall be approved by the Planning Commission by the same procedure, rules, and regulations as for a subdivision as specified herein.

2. Whenever a parcel of land is subdivided and the subdivision plat shows one or more lots containing more than one acre of land and there are indications that such lots will eventually be resubdivided into smaller parcels, the Planning Commission may require dedication of future streets and easements as it deems necessary for the opening and extension of future streets.

1.13 Vacation of Plats

1. Any plat or any part of any plat may be vacated by the owner of such, at any time before the sale of any lot therein, by a written instrument, to which a copy of such plat shall be attached, declaring the same to be vacated. This instrument shall be approved by the Planning Commission in like manner as plats of subdivision.

2. Such an instrument shall be recorded with Williamson County Register of Deeds in like manner as plats of subdivision. Being duly recorded shall operate to destroy the force and effect of the recording of the plat so vacated, and to divest all public rights in streets, public grounds and all dedications laid out or described in such plat.

3. When lots have been sold, the plat may be vacated in the manner herein provided by all owners of lots in such plat joining in the execution of the instrument of vacation.

1.14 Variances

1. Where the Planning Commission finds that extraordinary hardships or practical difficulties may result from strict compliance with these regulations or purposes thereof, it may approve variances to these subdivision regulations. Such variances shall not have the effect of nullifying the intent and purpose of these regulations.

2. Variances shall not be approved unless a finding is made by the Planning Commission based on evidence presented to it in each specific case that:

(a) The granting of the variance will not be substantially detrimental to the public good;

(b) The conditions upon which the request for a variance is based are unique to the property for which the variance is sought and are not applicable generally to other

property;

(c)Where, by reason of exceptional narrowness, shallowness, or shape of a specific piece of property at the time of enactment of these regulations or by reason of exceptional topographic conditions or other extraordinary and exceptional situation or condition of such piece of property, peculiar and exceptional practical difficulties or undue hardship would result;

(d)The variance will be consistent with the general community character of the subdivision;

(e)The variance will not in any manner vary the provisions of the Zoning Ordinance, Comprehensive Plan, County Road Plan, or Capital Improvements Program of Williamson County.

3. The Planning Commission may require such conditions as it deems necessary in order to substantially secure the objectives of the standards or the requirements of these regulations.

4. Any petition for variance shall state in writing the reasoning on which the variance is justified. This shall be submitted to the Planning Commission at the time that the preliminary plat is filed. The petition shall state fully the grounds for the applications and all of the facts relied upon by the petitioner.

5. If variance is approved by the Planning Commission, it shall be so noted both in the minutes of the Planning commission and on the final plat.

1.15 Enforcement

1. No plat or plan of a subdivision located within the area of planning jurisdiction shall be filed or recorded by the Register of Deeds until said plat or plan has received final approval in writing by the Planning Commission as provided in section 13-3-410 Tennessee Code Annotated.

2. No board, public officer, or authority shall light any street, lay or authorize the laying of water mains or sewers, or the construction of the facilities or utilities in any street located within the area of planning jurisdiction unless such streets shall have been accepted, opened or otherwise received the legal status of a public street prior to the adoption of these regulations or unless such street corresponds in its location and lines to a street shown on a subdivision plat approved by the Planning Commission, or on a street plan made and adopted by the Commission as provided in Section 13-3-411, Tennessee Code Annotated.

1.16 Penalties

1. No county register shall receive, file, or record a plat of a subdivision within the planning region without the approval of the Planning Commission as required in section 13-3-402, Tennessee Code Annotated, and any county register so doing shall be deemed guilty of a

misdemeanor, punishable as other misdemeanors as provided by law.

2. Section 13-3-410, Tennessee Code Annotated, provides that whoever being the owner or agent of the owner of any land, transfers or sells or agrees to sell or negotiates to sell such land by reference to or exhibition of or by other use of a plat of subdivision of such land without having submitted a plat of such subdivision to the Planning Commission and obtained its approval as required before such plat be recorded in the office of the appropriate county register, shall be deemed guilty of a misdemeanor, punishable as other misdemeanors as provided by law; and the description by metes and bounds in the instrument of transfer or other document used in the process of selling or transferring shall not exempt the transaction from such penalties. The county, through its attorney or other official designated by its chief Legislative body, and the county through its county attorney or other official designated by the County Commission may enjoin such transfer or sale or agreement by action or injunction. Any building or structure erected or to be erected in violation of the subdivision regulations shall be deemed an unlawful building or structure, and the county attorney or other official designated by the County Commission may bring action to enjoin such erection or cause it to be vacated or removed as provided in Section 13-3-410, Tennessee Code Annotated.

SECTION II

DEFINITIONS

2.1 Usage

1. For the purpose of these regulations, certain numbers, abbreviations, terms, and words used herein shall be used, interpreted, and defined as set forth in this section. Where words within these regulations have not been defined, the standard dictionary definition shall prevail.

2. Unless the context clearly indicates to the contrary, words used in the present tense include the future tense; and words in the plural include the singular.

2.2 Words and Terms Defined

Agricultural Subdivision - A subdivision consisting of three (3) or fewer lots of less than five (5) acres in size that are subdivided from a larger tract. The lots created must be one (1) acre in size as a minimum. The overall density of the original tract and the lot(s) created can be no greater than one (1) lot per five (5) acres.

Agent, Applicant, Developer, Subdivider - The owner of land proposed to be subdivided or his representative. One who, having an interest in land, causes it, directly or indirectly, to be divided into a subdivision. Consent shall be required from the legal owner of the premises.

Driveway Easement - A twenty five (25) foot wide easement from a public road for ingress and egress to one or more lot(s). Where minor subdivisions or agricultural subdivisions are dependent upon an easement for access, affix the Private Driveway Notation in Appendix B-9 to the face of the proposed subdivision plat(s).

Easement - Authorization by a property owner for the use by another, and for a specified purpose, of any designated part of his property.

Final Plat - Map or plan of record of a subdivision and any accompanying material, as described in these regulations.

Large Lot Major Subdivision - Any subdivision in which lots are five (5) acres or greater in area, which includes any of the following, or is greater than five (5) or more lots.

a. Requirements of any bondable improvements.
b. A petition for a variance from these regulations.
c. A notification to adjacent owners and a public hearing because the lots within a proposed subdivision are substantially out of character with surrounding development.

Lot - A parcel of land that:

1. is undivided by any street or private road;
2. is occupied by or designated to be developed for buildings or principal uses which must meet all zoning and subdivision requirements of these regulations and the Williamson County Zoning Ordinance; and
3. contains the accessory buildings or uses customarily incidental to such building, use, or development, including such open spaces and yards as are designed and arranged or required by the Zoning Ordinance for such building, use, or development.

Major Subdivision - Any subdivision consisting of five (5) or more lots with the exception of those classified as large lot major subdivision, as defined herein.

Minor Revision of Plat - An adjustment to the final plat that will not impact proposed or existing public improvements involving two (2) or fewer building lots.

Minor Subdivision - A subdivision, as herein defined, that is two (2) lots or less and does not involve any of the following:

a. Bondable improvements.
b. A petition for a variance.
c. A notification to adjacent property owners of Planning Commission consideration of the proposed subdivision.

Monument - A permanent surveying appurtenance that is utilized to verify location and elevation.

Off-Site - Any premises not located within the property to be subdivided, whether or not in the ownership of the applicant for the subdivision approval.

Owner - Any person, group of persons, firm or firms, corporation or corporations, or any other legal entity having legal title to or sufficient proprietary interest in the land sought to be subdivided under these regulations.

Pre-application Conference - A meeting held between applicant and Planning Staff to discuss requirements of plat approval.

Preliminary Plat - The preliminary drawing or drawings, described in these regulations, indicating the manner or layout of the subdivision to be submitted to the Planning Commission for approval.

Private Road Standard - A twenty-six (26) foot wide graveled surface located within a forty (40) foot wide easement. Base and sub-base of such shall meet the County standard herein.

Public Road Standard - A thirty (30) foot wide driving surface meeting County standards for base, sub-base and topping noted herein, within a minimum right-of-way of fifty (50) feet.

Resubdivision - A change in a map of an approved or recorded subdivision plat if such change affects any street layout on such map or area reserved thereon for public use, or any lot line; or if it affects any map or plan legally recorded prior to the adoption of any regulations controlling subdivisions.

Sale or Lease - Any immediate or future transfer of ownership, or any possessory interest in land, including contract of sale, lease, devise, or transfer, of an interest in a subdivision or part thereof, whether by metes and bounds, deed, contract, plat, map, lease, devise or other written instrument.

Concept Plan - A generalized concept plan of subdivision offering information in regard to proposed improvements and natural features of the property in question prepared prior to preliminary plat to save time and expense in reaching general agreement as to the form of the plat and the objectives of these regulations.

Slope - the deviation of the land surface from the horizontal per unit horizontal distance changed, generally expressed in percent, i.e. vertical rise or fall per foot dividing the horizontal distance between contour lines into the vertical interval of the contours as required by the appropriate regulations.

Small Major Subdivision - A subdivision that contains two (2) to four (4) lots of less than five (5) acres each with no public improvements (roads, waterlines or sewer lines) required and requiring Planning Commission approval. Unless otherwise specified, the procedure outlined for major subdivisions is applicable to small major subdivisions.

Subdivision - The division of a tract or parcel of land into two (2) or more lots, sites or other divisions requiring new street or utility construction, or any division of five (5) acres or less or of more than five (5) acres in size for the purpose, whether immediate or future, of sale or building development and includes resubdivision and when appropriate to the context, related to the process of resubdividing or to the land or area subdivided.

Utility - Any construction of public roads, public water, public drainage, public sanitary facilities or any other improvement that is or will be dedicated to public use.

Variance - Permission to depart from the literal requirements of these regulations granted pursuant to Section 1.14.

SECTION III

SUBDIVISION APPLICATION PROCEDURE, APPROVAL PROCESS AND PLAT SPECIFICATIONS

3.1 General Procedure

1. Classification of Subdivisions

Whenever any subdivision of land is proposed, and before any permit for erection of a structure in such proposed subdivision shall be granted, the subdividing owner, or his authorized agent, shall apply for a secure approval of such proposed subdivision in accordance with the following procedure (see Table III-I) .

a. Minor Subdivision

(i) Minor Subdivisions are those which consist of two (2) lots or less and do not involve any of the following:

a. Bondable improvements.
b. A petition for a variance.
c. A notification of adjacent property owners of Planning Commission consideration of the proposed subdivision.

(ii) In cases where any of (i) above are found, such subdivisions shall be considered under the criteria for major subdivisions.

(iii) Minor Subdivisions are subject to the following steps of approval:

a. Preapplication conference.
b. Final plat.

(iv) For purposes of this definition, any further subdivision of the lots and/or tracts making up a minor subdivision, both original and new, within twelve (12) months will require that the subdivision will be subject to review as either a Small Major or Major Subdivision by the Planning Commission, and subject to all criteria accompanying such a request.

(v) Where minor subdivisions are dependent upon an easement for access, affix the Private Driveway Notation in Appendix B-9 to the face of the proposed subdivision plat(s).

b. Major Subdivision

(i) Major Subdivisions are those consisting of five (5) or more lots.

(ii) Major Subdivisions are subject to the following steps of approval:

a. Concept Plan
b. Preliminary Plat
c. Final Plat

(iii) A pre-application conference is required prior to submission of a Concept Plan, Preliminary Plat and Final Plat.

c. Agricultural Subdivision

(i) Agricultural Subdivisions are those consisting of three (3) or fewer lots of less than five (5) acres in size that are subdivided from a larger tract of land. The overall density of the original tract and the lot(s) created can be no greater than one (1) lot per five (5) acres. Agricultural Subdivisions cannot involve any of the following:

a. Bondable improvements.
b. A petition for a variance.
c. A notification of adjacent property owners of Planning Commission consideration of the proposed subdivision.

(ii) Agricultural Subdivisions are subject to the following steps of approval:

a. Preapplication conference
b. Final plat

(iii) In order to maintain the one lot per five acre overall density, it will be necessary to depict on the final plat the total development potential and the area of the mandatory residual tract. Within the boundary of the residual tract, the following note must be placed:

"The remaining development on the residual lot of this subdivision may consist of no more than ____ dwelling units. A minimum of _____ acres of the residual lot shall be maintained as permanent open space, as lot(s) ____ (and/though ____) of this subdivision and were thus recorded as an agricultural subdivision and were thus exempted from providing the required open space within their boundaries."

An additional note shall be required on the plat of subdivision, and shall read as follows:

"As the owner of all land in this subdivision, I hereby agree to a restriction of the development potential on the residual lot, through a deed restriction in

favor of Williamson County, as indicated in the note shown on the residual parcel.

Signed _____. Date _____."

(iv) Where agricultural subdivisions are dependent upon an easement for access, affix the Private Driveway Notation in Appendix B-9 to the face of the proposed subdivision plat(s).

d. Large Lot Major Subdivision

(i) Large Lot Major Subdivisions are any subdivisions in which lots are five (5) acres and greater in area, or is greater than five (5) or more lots.

a. Requirement of any bondable improvements.
b. A petition for a variance from these regulations.
c. A notification to adjacent owners and a public hearing because the lots within a proposed subdivision are substantially out of character with surrounding development.

(ii) Large Lot Major Subdivisions are subject to the following steps of approval:

a. Preapplication Conference
b. Concept Plan
c. Preliminary Plat (may be concurrent with Concept Plan)
d. Final Plat

e. Large Lot Major Subdivision on Private Driveway

(i) Large Lot Major Subdivisions on Private Driveways are any subdivisions in which lots are five (5) acres and greater in area and take access from a private driveway. The following criteria apply:

a. A maximum of five (5) lots may take exclusive access from the private driveway.
b. Lots with minimum required road frontage may be included in the subdivision and must be shown on the plat.
c. Should lot configurations result in less than 200 feet between houses, a fire hydrant will be required.
d. Minimum width of easement shall be 50 feet. Drainage and utility right-of-way may be included in this 50 feet and is to be shown on the plat.
e. Plats must include signature blocks for:

1. Certificate of Ownership and Dedication
2. Certificate of Accuracy

3. Review of soils map and letter of approval of plat by Department of Sewage Disposal Management
4. Signature of Utility System indicating agreement to supply water
5. Certificate of Approval for Recording
6. Private Driveway Notation (see Appendix B-9)

f. The Community Development Department shall provide written notice of the proposed subdivision to all property owners currently taking access from the private driveway, regardless of whether such properties are depicted on the proposed plat, no less than 15 days prior to approval of the Final Plat.

(ii) Large Lot Major Subdivisions on Private Driveways are subject to the following steps of approval:

a. Preapplication Conference
b. Final Plat

f. Small Major Subdivision

(i) Small Major Subdivisions are those that contain two (2) to four (4) lots of less than five (5) acres in area that do not involve the following:

a. Bondable improvements.
b. A petition for a variance.
c. A notification of adjacent property owners of Planning Commission consideration of the proposed subdivision.

(ii) Small Major Subdivisions are subject to the following steps of approval:

a. Preapplication Conference
b. Concept Plan
c. Final Plat

TABLE III-1

TYPE	**# OF LOTS**	**LOT AREA**	**PRE-AP CONF**	**CONCEPT**	**PREL.**	**FINAL**
Minor	2 or fewer (a)	N/A	X			X (c)
Major	5 or greater	N/A	X (d)	X	X	X
Agricultural	3 or fewer (a)	5 A.+	X			X (c)
Small Major	2 to 4	N/A	X (d)	X		X
Large Lot Major	5 or greater	5 A.+	X (d)	X	X (b)	X

(a) See definitions in Section II for criteria.
(b) May be simultaneous with Concept Plan.
(c) Approved by Secretary of Planning Commission only.
(d) A pre-application conference is required prior to submission of a Concept Plan, Preliminary Plat and Final Plat.

2. Official Submittal Dates

a. For the purpose of these regulations, in cases of major, large lot major and small major subdivisions, the date of the regular meeting of the Planning Commission at which the preliminary or final approval of the subdivision plat is considered shall constitute the official submittal date. The Planning Commission shall approve, approve with conditions, or disapprove said plats within sixty (60) days of the official submittal date. Failure to act within the sixty (60) day period, except as agreed to by applicant, shall constitute approval of the subdivision.

b. Minor and agricultural subdivisions shall be approved, approved with conditions or disapproved within sixty (60) days of submittal of Concept plan. Failure by Secretary of the Planning Commission to act within the sixty (60) day period shall constitute approval, except as agreed to by applicant.

3. Standard Format for Final Plats

All final plats shall conform to the format noted in Appendix B, Exhibit 1 through 9.

4. Filing Fees for Plat Approval

a. Any application submitted for preliminary and final approval of a subdivision plat shall be accompanied by a filing fee. No subdivision plat shall be considered for Planning Commission action without the required fees:

(i) $5.00 per acre for Concept plans submitted in conjunction with major, large lot major and small major plats;

(ii) $10.00 per acre for preliminary plat;

(iii) $15.00 per buildable lot created or dwelling unit for final plat; and

(iv) $50.00 for minor revision to final plat, minor subdivision plat, or agricultural subdivision plat.

(v) $15.00 per buildable lot created or dwelling unit for major revisions to final plat.

b. In cases where Concept plan and preliminary plat are considered concurrently, the preliminary plat fee shall be considered appropriate.

5. Reapproval of Final Plats

If a performance bond and necessary surety have not been posted within the required time period or final plat has not been recorded with Williamson County Register of Deeds within prescribed time period, a reapproval will be necessary. A reapproval final plat fee equal to the original final plat fee shall be considered appropriate.

6. Reconsideration Fee

Failure of an applicant to appear before the Planning Commission for an item requiring notice to adjacent property owners or a public hearing shall be charged a $20.00 fee for reconsideration to be doubled each time the applicant should fail to appear. Reconsideration of any other item when no representative was present will require an additional fee equal to the original fee. The Planning Commission may waive these fees if sufficient notice is given so that property owners can be notified or if the applicant could not attend for reasons beyond his control.

3.2 Specific Procedure

1. Preapplication Conference

A pre-application conferene shall be held a minimum of ten (10) days prior to the submittal of a Concept Plan, Preliminary Plat or Final Plat.

2. Concept Plan

a. Prior to submission of a preliminary plat, Planning Commission approval of a concept plan may be required~~,~~ depending upon the type of subdivision.

b. The concept plan should conform to the specifications noted on Form 2, Appendix A.

c. The concept plan with the information indicated above shall be submitted to Planning Staff at least twenty-one (21) days prior to consideration of the concept plan by the Planning Commission. Planning Staff shall determine whether all information pertinent to review has been provided and within ten (10) days of commencement of the above-noted review period shall notify the applicant that either:

i) additional information is required; or

ii) the concept plan has been accepted for consideration and shall be reviewed by the Planning Commission at its next meeting.

d. Planning Staff will prepare a recommendation regarding approval as presented, approval with changes or conditions, deferral, or disapproval of the Concept Plan.

e. The necessary plans for the next stage of the approval procedure, as identified in Section 3.1.1. herein, must be submitted within six (6) months of the review date of the Planning Commission. Failure to do so will mandate that the concept plan must be re-submitted to the Planning Commission for review, and consideration of any changes in conditions upon which the original review was based.

3. Preliminary Plat

a. Prior to submission of final plat, a preliminary plat may be required by the Planning Commission, depending upon type of subdivision.

b. An application for preliminary plat approval shall be submitted to Planning Staff twenty-one (21) days prior to the meeting of the Planning Commission at which the subdivision will be considered. All filing fees will be due with this submittal.

c. The preliminary plat shall conform to the specifications on Form 2, Appendix A.

d. The Planning Staff shall determine whether all information pertinent to the review has been provided and within ten (10) days of commencement of the above-noted review period shall notify the applicant that either:

i) additional information is required; or

ii) the preliminary plat has been accepted for consideration and shall be reviewed by the Planning Commission at its next meeting.

e. Upon receipt of all required information for preliminary plat approval, the Planning Staff and other affected agencies shall review the proposed plat, compare the plat with the approved Concept plan and related information and the staff shall prepare a recommendation to the Planning Commission regarding outright approval, approval with changes or conditions (such as the need for approved grading and erosion control plans prior to site construction work commencing), deferral, or disapproval of the plat. To aid in the review of the proposed subdivision, the Planning Staff may arrange a field trip with the applicant to inspect the site. Additionally, the staff shall determine whether there is a need to notify adjacent property owners of the proposed subdivision. Generally such notification to adjacent owners should be given when a variance which varies a subdivision regulation by more than twenty (20%) percent is requested, or when lots in a proposed subdivision are substantially out of character with the surrounding area. Such notification to adjacent property owners should be given at the same time the developer is notified that the application is complete and has been accepted for consideration; provided, however, such notification shall be mailed out at least seven (7) days before the date on which the Planning Commission will consider the subdivision.

f. The Planning Commission shall within sixty (60) days from the date of first consideration of the subdivision approve, approve with changes or conditions, or disapprove the preliminary plat. Upon approval, one copy, with all changes or conditions noted thereon,

shall be returned to the developer.

The developer shall in turn provide the Planning staff with two (2) additional copies of the approved plat with all changes and conditions noted thereon.

4. Final Plat

a. After the proposed subdivision has been approved and improvements made in accordance with the approved preliminary plat, or bond adequate in form and amount to assure the completion of the required improvements has been established, the final plat may be prepared and presented to the Planning Commission for final approval. In cases of minor and agricultural subdivisions and minor revisions, the application must be made to Secretary of Planning Commission for approval.

b. An application for final plat approval shall be submitted to Planning Staff twenty-one (21) days prior to the meeting of the Planning Commission at which the subdivision will be considered. All filing fees will be due with this submittal.

c. Final Plats for each subdivision type shall be submitted in conformance with the specifications noted below:

i) Minor subdivision final plats shall be submitted in conformance with Form 3, Appendix A.

ii) Major subdivision final plats shall be submitted in conformance with Form 4, Appendix A.

iii) Agricultural subdivision final plats shall be submitted in conformance with Form 5, Appendix A.

iv) Small major subdivision final plats shall be submitted in conformance with Form 6, Appendix A.

v) Large lot major subdivision final plats shall be submitted in conformance with Form 7, Appendix A.

d. The final plat shall conform substantially to the preliminary plat as approved, and, if desired by the subdivider, it may constitute only that portion of the approved preliminary plat which he proposes to record and develop at the time, provided, however, that such portion conforms to all requirements of these regulations.

e. The Planning Staff shall determine whether all information pertinent to the review has been provided and within ten (10) days of commencement of the above-noted review period shall notify the applicant that either:

i) additional information is required; or

ii) the preliminary plat has been accepted for consideration and shall be reviewed by the Planning Commission at its next meeting.

f. The Planning Commission or designee shall within sixty (60) days from the date of first consideration of the subdivision approve, approve with changes or conditions, or disapprove the final plat.

g. After approval has been given, one (1) print on mylar no larger than 18" x 24" for recording together with prints for distribution shall be furnished by the developer.

h. A .dwg file based on the Tennessee State Plane Coordinate System shall be submitted in a recordable media format to staff prior to the plat's recording.

i. Approval of the final plat by the Planning Commission shall not constitute the acceptance by the County and the dedication of any streets or other public way or ground.

j. Required bond, if any, shall be posted within sixty (60) days after approval of Final Plat. The Plat shall be registered within thirty (30) days after the bond has been posted if required, or if no bond is required, thirty (30) days after approval.

k. Unless otherwise provided by these regulations, consideration of preliminary and final plats shall not occur at the same meeting.

5. Minor Revision to Final Plat

a. To facilitate minor revisions to Final Plats that have been previously approved by the Planning Commission, the Planning Staff may have the authority to recommend approval of the revision and to instruct the Secretary of the Planning Commission to sign the plat.

b. A minor revision to final plat is defined as an adjustment that will not impact proposed or existing public improvements involving two (2) or fewer building lots.

c. The following procedure shall be used:

i) Before submission of the application and the revised final plat, the applicant shall present a Concept of the proposed revisions to the Planning Staff. The staff will review the revisions and within ten (10) days shall determine if they are in fact "Minor Revisions".

ii) After determination that the revision is a "Minor Revision", the applicant shall submit the revised Final Plat or other appropriate document, utilizing Form 8,

Appendix A. The plat shall use the same format as an original Final Plat except that it shall state that it is a revision and the certificates from the Road Superintendent I the Environmental Department and the Utility District may be eliminated from the Plat, as applicable.

iii) The Planning Staff shall have at least ten (10) working days to review and dispose of the application for revised final plat approval. If the staff determines that certain information pertinent to the review is lacking the staff shall notify the applicant in writing within the initial ten (10) day review period of such deficiency and shall hold the application in abeyance until the additional information is provided upon receipt of all required information, certificates, and fees, and upon the determination by the Planning Staff that the revised final plat meets the regulations in every respect, the Secretary of the Planning Commission may sign said plat on behalf of the Planning Commission and release it for recording.

iv) The plat may then be recorded at the Williamson County Register of Deeds Office. All revised plats approved and released in this manner shall then be reported to the Planning Commission at its next regular meeting and such administrative approval shall be confirmed by the Planning Commission.

6. Expiration/Vesting

a) Major Subdivisions

Following approval of a concept plan, the applicant has three (3) years to obtain approval of a final plat, secure necessary permits (e.g. Land Disturbance Permit) and commence site preparation. If any of these do not occur within three (3) years of concept plan approval, then the approval shall expire and a new approval must be sought. For purposes of this Subsection, approval of a final plat is obtained upon the recording of an approved final plat in accordance with Section 3.2.4 of these Regulations.

If the applicant satisfies these requirements, and provided that the applicant commences construction within two (2) years from the date the concept plan could have expired, and further provided that the applicant maintains all necessary permits, then the development standards applicable at the time of approval of the concept plan shall be in effect during the applicable vesting period as outlined in TCA 13-3-413, and as amended, except where there is an amendment to the concept plan or final plat that meets the requirements of TCA 13-3-413(h), and as amended, or violation of approval in accordance with TCA 13-3-413(f), and as amended.

b) Minor Subdivisions

If construction commences within two (2) years from final plat approval, and provided that all necessary permits are maintained, then the development standards applicable at the time of approval shall be in effect during the applicable vesting period as outlined in TCA 13-3-413, and as amended, except where there is an

amendment to the final plat that meets the requirements of TCA 13-3-413(h), and as amended, or violation of approval in accordance with TCA 13-3-413(f), and as amended.

For the purpose of this Subsection, approval of a final plat is obtained upon the recording of an approved final plat in accordance with Section 3.2.4 of these regulations.

SECTION IV

Surety For Completion and Maintenance of Improvements

Section 4.1: Completion of Improvements

Except as otherwise provided in Section 4.2 below, before the final subdivision plat is signed by the Secretary of the Planning Commission, all applicants shall be required to:

A) Complete all of the street, water, sanitary and other improvements, including lot improvements as required in these regulations, and as specified in the Final Plat; and

B) Dedicate all public improvements to Williamson County and/or the appropriate utility free and clear of all liens and encumbrances on the property and on said public improvements.

Section 4.2: Performance Guarantees

A) Performance Agreement

The Planning Commission, at its discretion, may waive the requirement that the applicant complete and dedicate all improvements prior to the execution of the Final Plat, and as an alternative, allow an applicant to delay the installation of certain on-site and off-site infrastructure or improvements through the execution of a Performance Agreement with supporting surety. The Planning Commission may consider previous performance and/or maintenance by the applicant in its deliberations to grant a waiver.

1) In order for the plat to receive final approval and be eligible for execution by the Secretary of the Planning Commission and recordation in the Register of Deeds office, the applicant shall execute a Performance Agreement and post the supporting surety within 60 days of approval of a

Final Plat by the Planning Commission. Failure to execute the Performance Agreement or post the surety within 60 days will result in expiration of the approval of the Final Plat.

2) The Performance Agreement shall be in the amount of 120 percent of the actual estimated cost of the construction of the infrastructure or improvements as determined by the Highway Superintendent, County Engineer, Planning Director or applicable utility district.

3) Said Performance Agreement and supporting surety shall be in a form and manner approved by the County Attorney and in accordance with the requirements of this Section IV. Upon determination by the County Attorney that these documents are acceptable, the County Attorney shall affix his signature to the surety and return the documents to the Planning Commission Secretary, or his designee, who will then notify the applicant that the Final Plat may be recorded.

4) The period within which required improvements shall be completed shall not exceed one year from the date the Performance Agreement is signed; however, extensions of time and reductions of surety may be approved by the Planning Commission in accordance with this Section IV.

5) The Performance Agreement shall remain in force in its full face amount until improvements are completed and recommended for maintenance by the County and its appropriate departments or utility district, as applicable; however, the Performance Agreement supporting surety obligation may be reduced by the Planning Commission as provided in Section 4.2(C): Reduction or Release of Performance Agreement and Surety.

6) The applicant shall submit a letter to the Planning Department in which he agrees to have a registered professional engineer involved in the construction phase for roads, drainage and erosion control of the project and for nontraditional wastewater treatment and disposal systems for the purpose of monitoring construction in order to ensure conformity with approved plans and specifications.

B) Surety Required

1) A Performance Agreement authorized by the Planning Commission shall be secured by either an irrevocable standby letter of credit from an approved financial institution with an automatically renewable feature, (often termed as an "evergreen" letter of credit), or a certified check from an approved financial institution. The beneficiary of the surety shall be the Williamson County Regional Planning Commission, the Williamson County Highway Department, or the applicable utility district. For purposes of this Section IV, an approved financial institution is bank or trust company chartered by the State of Tennessee or a national bank or federal savings association chartered and regulated by the Office of the Comptroller of the Currency.

2) The financial institution shall permit the letter of credit to be presented for collection at an office or branch physically located within Williamson County, Tennessee or via overnight delivery service.

C) Reduction or Release of Performance Agreement and Surety

1) Notwithstanding maintenance obligations which are governed by Section 4.3: Maintenance Obligations, after a Performance Agreement and supporting surety have been posted by the applicant, the Performance Agreement supporting surety obligation may be reduced by the Planning Commission as provided in Section 4.2(A): Performance Agreement.

2) A request for reduction of the surety or release of the Performance Agreement shall be submitted to the Community Development Department. The Planning Commission may release the Performance Agreement, extend the Performance Agreement, or reduce a surety after consultation with the applicable utility district or County departments. In the event the request for release or reduction occurs prior to the expiration of the last term authorized by the Planning Commission, an early review fee, as established in the Administrative Manual, will be assessed to the applicant at the time of the request.

3) Performance Agreements may be extended as determined by the appropriate utility districts or County departments, but such extensions shall not exceed

one year. Extensions of Performance Agreements may necessitate an increase in the Performance surety amount.

4) If the applicant requests extension of any Performance Agreement because of inadequate completion, then an extension fee, as established in the Administrative Manual, shall be assessed to the applicant. If the County requests the extension because it would be in the best interest of the County, then this extension fee shall be waived.

5) Except for maintenance obligations, which are governed by Section 4.3: Maintenance Obligations, a request for reduction of the surety or release of the Performance Agreement shall not be granted until all of the following have been completed:

a) The applicant has presented a letter to the Community Development Department requesting reduction of the surety, including the percentage amount of completion of the improvement, or release of the Performance Agreement. Such requests shall include a letter from the engineer (for roads, drainage and/or erosion control improvements or nontraditional wastewater improvements) employed by the applicant stating that the improvements have been installed in accordance with the approved plans and specifications, or in the case of a request for reduction, specifying the percentage of completion of the improvement. If a letter for release, the letter shall certify that the engineer has inspected the project and attest that the improvements have been constructed per the approved design. The letter shall be signed and sealed by the engineer. Once such a written statement from the engineer has been received, an inspection by the applicable County department shall be performed at no cost to the applicant.

b) The appropriate County department has submitted a statement to the Community Development Department indicating that the required improvements or required landscaping have been inspected and satisfactorily completed in accordance with the approved plans, or in the case of a request for reduction, specifying the status or percentage of completion of the improvement.

c) Inspection of improvements by appropriate County departments shall not be the basis of the applicant's evaluation of the work performed by its contractors. An applicant shall retain a licensed engineer to

oversee the construction and certify compliance with the approved plans and specifications.

6) No Performance Agreement for public improvements or applicable private infrastructure shall be reduced to less than 25 percent of its full-face amount, irrespective of the estimated cost of completing the improvements. An amount equal to 25 percent of the original amount may be added to the reduced amount for possible future inflation cost.

7) Performance Agreements for landscaping shall not be reduced to less than 75 percent of its full-face amount, irrespective of the estimated cost of completing the improvements.

8) The applicant's costs incurred in connection with a request for the extension or reduction of the surety or the release of a Performance Agreement and surety (that is, engineering inspections fees, legal fees, and so forth) shall be borne by the applicant, regardless of whether his/her request is ultimately granted.

9) Performance Agreement terms and requirements for Nontraditional Wastewater Treatment and Disposal Systems and accompanying collection systems are outlined in Article 20: Nontraditional Treatment and Disposal Systems of the Zoning Ordinance and are incorporated herein by reference.

Section 4.3: Maintenance Obligations

Upon completion of the Performance period, the applicant shall be required to maintain the completed improvements and required landscaping to ensure against defects in workmanship and materials. Maintenance obligations shall be subject to the terms of the Performance Agreement, which may also address the maintenance obligations unless a separate Maintenance Agreement is executed. The maintenance obligations shall be applied in accordance with the following standards:

1) The maintenance obligation shall remain in effect for a minimum period of one year or until final release of the maintenance obligation by the Planning Commission or other appropriate County departments, whichever period is longer.

2) Such maintenance obligation shall be in an amount satisfactory to the Planning Commission or other appropriate County departments, whichever is applicable. However, the maintenance obligation for landscaping improvements shall not be less than 25 percent of the original full-face amount or $3,000.00, whichever is greater, and the maintenance obligation for all other improvements shall not be less than 25 percent of the original full-face amount or $3,000.00, whichever is greater.

3) The applicant shall be required to execute a Maintenance Agreement, if not addressed in the Performance Agreement, ensuring the maintenance obligation and secured by supporting surety. The same requirements and restrictions applicable to the supporting surety for the Performance Agreement shall apply to the Maintenance Agreement as described in Section 4.2(B): Surety Required.

4) If the improvements are not accepted at the expiration of the one year maintenance period, the Planning Commission may extend the maintenance period in intervals of one year until accepted or called. The maintenance period will only begin after the water and all in-ground utilities are installed, and the road and shoulder base, binder and the drainage system for the roads have been properly constructed.

5) At 80% build out of the Final Plat, at the end of the one year Maintenance period, or when considered appropriate by the Planning Commission, the applicant shall complete the improvements. The release of the Maintenance Agreement and supporting surety shall be contingent upon the completion of the above and, in the case of public road improvements, acceptance of the dedication by the County Board of Commissioners.

6) The Planning Commission will not consider release of the Maintenance Agreement and surety until and unless assurances have been obtained through affidavits, releases, or waivers of liens from all contractors and subcontractors of the filing of public disclaimers, that liens will not be filed against the dedicated land or improvements after they are accepted by the Community Development Department or appropriate County department.

7) Maintenance Agreement terms and requirements for Nontraditional Wastewater Treatment and Disposal Systems and the accompanying collection systems are outlined in Article 20: Nontraditional Treatment and Disposal Systems of the Zoning Ordinance and are incorporated herein by reference.

Section 4.4: Failure to Complete Improvements

1) Where a Performance Agreement has been executed with a supporting surety posted and required improvements have not been installed within the terms of such Performance Agreement, the Planning Commission may thereupon declare the Agreement to be in default and require that all the improvements be installed regardless of the extent of the building development at the time the agreement is declared to be in default.

2) Where a Maintenance Agreement has been executed with a supporting surety posted and required improvements have not been maintained within the terms of such Maintenance Agreement, the Planning Commission may thereupon declare the agreement to be in default and require that all the improvements be installed/maintained regardless of the extent of the building development at the time the Agreement is declared to be in default.

3) Consequences of Default:

a. The Planning Director shall notify the Building Codes Director that the Performance Agreement and/or Maintenance Agreement for the subject site is in default and request that no new building permits for principal structures be issued in the development following receipt of the notification of default.

b. The Planning Director shall also issue a notice that the subject site is in default. Said notice shall be recorded in the Registers Office of Williamson County, Tennessee.

c. Exemption from Default: Where a lot owner purchased his/her lot prior to the recording of the Notice of Default in the Registers Office of Williamson County, and where the lot owner or any successor in title is not associated with the original or any subsequent developer in any way, that lot owner or successor in title shall be considered an innocent purchaser. An innocent purchaser may be issued a building permit on the lot despite the Notice of Default. Said lot owner or successor in title shall file a zoning certificate requesting exemption from the default and provide all documentation necessary to evaluate whether he/she meets the criteria for exemption. Following review of the request, the Planning Director has the authority to determine whether the lot owner or successor in title is exempt from the default,

whereupon, the Planning Director shall notify the lot owner or successor in title and the Building Codes Director of the exemption.

d. In the event the subject site is thereafter found not to be in default for any reason, prompt notice shall be given to the Building Codes Director and a release of the default recorded in the Registers Office of Williamson County, Tennessee. A default of one section of a subdivision plat, where the development is being constructed in multiple phases or sections shall cause the entire development to be found in default and no new building permits for principal structures may be issued in that development. Additionally, no applications for additional phases or sections of the development maybe submitted for consideration by the Planning Commission until such time as the default is cured and released by the Planning Commission.

4) In the event the Performance Agreement and/or supporting surety or the Maintenance Agreement and/or supporting surety is not renewed or extended as approved by the Planning Commission within 14 days of the expiration date of same, or if the new documentation is not in accordance with this Section IV, then the Performance Agreement and supporting surety or Maintenance Agreement and supporting surety may be declared in default and the Secretary of the Planning Commission, or his designee, may issue a call or draw letter.

5) In all instances where a development is declared in default for any reason, when the surety is provided by a financial institution, a call or draw letter shall be presented to said financial institution for payment. Otherwise, the call or draw letter shall be presented to the applicant. Funds "called" pursuant to the Performance Agreement and supporting surety or Maintenance Agreement and supporting surety shall be placed in escrow in the County treasury. A fee will be assessed for each letter of credit or surety "called" in accordance with this Section, as established in the Administrative Manual. Issuance of a call or draw letter by the Secretary of the Planning Commission, or his designee, does not relieve the applicant of the obligations as specified in the Performance or Maintenance Agreement. The applicant may also be responsible for the costs and fees of the County in enforcing the terms of the Performance Agreement or Maintenance Agreement, including, but not limited to, any legal fees incurred by the County.

Section 4.5: Acceptance of Dedication Offers

Acceptance of offers of dedication of public roads or streets or other public improvements to Williamson County shall be by the Board of County Commissioners, after review by the Highway Commission and Planning Commission. Only after acceptance of said dedications by the Board of County Commissioners may a Maintenance Agreement and supporting surety be released. Approval of a subdivision plat by the Planning Commission shall not be deemed to constitute or imply acceptance by Williamson County of any public roads or streets or other public improvements shown on the plat. The Planning Commission shall require said plat to be endorsed with appropriate notes to that effect.

SECTION V

REQUIREMENTS FOR IMPROVEMENTS, RESERVATIONS AND DESIGN

5.1 General Improvements

1. Conformance to Applicable Rules and Regulations

In addition to the requirements established herein, all subdivision plats shall comply with the following laws, rules, and regulations.

a. All applicable statutory provisions.
b. The Comprehensive Plan, the Zoning Ordinance, the Regulations for Wastewater Treatment and Land Disposal Systems, County Road Plan, adopted utility plans, and Capital Improvements Budget and Program.
c. The special requirements of these regulations and any rules of applicable Williamson County Agencies.
d. The rules of the State Department of Transportation when the subdivision or any lot contained therein abuts a state highway or connecting street.
e. As a minimum the regulations of the State Department of Environment and Conservation and Williamson County Environmental Department pertaining to water mains and sanitary sewer design and construction.

Plat approval may be withheld when a subdivision is not in conformity with the above guide or policy and purposes of these regulations established in Sections 1.2 and 1.5.

Any proposed subdivision which is not substantially in conformity with the planned growth as presented in the Comprehensive Plan, the County Road Plan, the Zoning Ordinance & Capital Improvement Budget and Program, or adopted utility plans shall be subject to disapproval on the grounds that it is premature and does not conform to existing plans.

2. Self-Imposed Restrictions

If the applicant places restrictions on any of the land within a subdivision other than those required by the County Zoning Ordinance or these regulations, such restrictions or reference thereto may be required to be indicated on the subdivision plat, or the Planning Commission may require that restrictive covenants be recorded with the Register of Deeds Office.

3. Plats Straddling Governmental Boundaries

Whenever access to the subdivision is required across land in another local government, the Planning Commission may request assurance from the local government attorney that access is legally established, and from the local government engineer that the access road is adequately improved, or that a performance bond has been duly executed and is sufficient in amount to assure the construction of the access road. In general, lot lines should be laid out so as not to cross

municipal or county boundary lines.

4. Monuments

The applicant shall place permanent reference monuments in the subdivision as required herein and certified by a Land Surveyor licensed in Tennessee. Generally, subdivisions shall be surveyed and laid out based on a system of coordinates to reduce the number of monuments required and enhance future surveying within and adjacent to the subdivision. Where feasible, such survey shall be tied to the Tennessee Code System.

a. All permanent reference monuments shall meet the specifications established in Appendix B, Exhibits 2 or 2A.

b. In all subdivisions but minor, permanent reference points shall be located and identified as follows:

i. A monument shall be placed at each corner along the external boundary of the subdivision.
ii. Monuments shall be placed at each intersection as illustrated in Appendix B, Exhibit 1.
iii. Additional monuments may be required wherever necessary to maintain line-of-sight between monuments to ensure the capability to locate other points on the final plat.
iv. All other angle points, points of curvature, changes in radii of curvature, and other significant reference points shall be located with monuments.
v. In cases where the 100 year floodplain encroaches on the property, a permanent benchmark shall be established and depicted upon the final plat.

c. In minor subdivisions, two (2) monuments shall be placed on a common line within this subdivision. Additional monumenting may be required wherever necessary to maintain line-of-sight between monuments to ensure the capability to locate other points on this final plat.

5. Character of the Land

Land which the Planning Commission finds to be unsuitable for subdivision or development due to natural resources, flooding, improper drainage, steep slopes, rock formations, unstable soils or geologic conditions, utility easements, or other features which will reasonably be harmful to the safety, health and general welfare of the present or future inhabitants of the subdivision and/or its surrounding areas, shall not be subdivided or developed unless adequate methods are formulated by the applicant and approved by the Planning Commission, upon recommendation of the County Environmental Department, County Engineer, or other agency, to solve the problems posed by the unsuitable land conditions. Such land shall be set aside for uses that will not involve a danger. Evaluation criteria to determine land suitability outlined in Division 7000 of the Williamson County Zoning Ordinance shall be utilized.

6. Subdivision Name

The proposed name of the subdivision shall not duplicate, or too closely approximate phonetically, the name of any other subdivision in the area within Williamson County. The naming of subdivisions shall be primarily the responsibility of the applicant; however, the Planning Commission shall have final authority for the naming of subdivisions.

5.2 Lot Improvements

1. Lot Arrangement

The lot arrangement shall be such that there will be no foreseeable difficulties, for reasons of topography, drainage or other conditions, in securing building permits to build on all lots in compliance with the Zoning Ordinance and Health Regulations and in providing driveway access to buildings on such lots from an approved street. Where topography would affect the suitability of a proposed lot as a building site, such lot shall be evaluated according to the criteria in Division 7100 of the Williamson County Zoning Ordinance.

2. Lot Development

To enhance the visual quality of a subdivision, protect certain natural environment features, create or maintain vistas, properly orient development to climatic conditions, or provide variations in the pattern of open space in the subdivision, the Planning Commission may require on the final plat building envelopes, variable setbacks, or other reasonable yard requirements which may be more restrictive than those established in the Williamson County Zoning Ordinance.

3. Lot Dimensions

All lots created shall conform to, at minimum, the dimensional requirements of this Regulation and the Zoning Ordinance. In general, all side lot lines shall be at right angles to street lines (or radial to curving street lines) unless a variation will give a better street or lot plan. Dimensions of corner lots shall be large enough to allow for erection of buildings observing the minimum yard requirements and obstruction prohibition regulations for all uses as established in this Regulation and the Zoning Ordinance. The minimum lot size, road frontage, and setback requirements shall conform to that of the zoning restrictions of the appropriate classification as designated in the Zoning Ordinance with the most restrictive requirements prevailing in each situation.

The depth and width of lots reserved or laid out for business, commercial, or industrial purposes shall be adequate to provide for the off-street parking and load facilities required for the type of use contemplated, as established in this Regulation and the Zoning Ordinance.

4. Double Frontage Lots

Double frontage and reverse frontage lots shall be avoided except where necessary to provide separation of residential development from traffic arterials or to overcome specific disadvantages of

topography and orientation.

5. Access to Lots

Lot access from arterial streets shall be avoided wherever possible to limit traffic hazards along such streets. Where lots must derive access solely from arterial streets, driveways should be designed and arranged so as to avoid requiring vehicles to back into traffic on such streets.

6. Soil Preservation, Grading, Seeding

In order to preserve soils and prevent unnecessary erosion of lots created, both the area of and the time during which lots are exposed to potential erosion shall be kept to the minimum possible. During site preparation and construction of facilities to be dedicated to the public, it is the responsibility of the applicant to maintain stable soil conditions of lots draining to public areas. All unsold lots affected by grading and clearance during preparation of the subdivision shall be properly stabilized prior to approval of the final plat or release of the performance bond. Also all pertinent requirements of Section 7200 of the Williamson County Zoning Ordinance must be met.

7. Lot Drainage

All lots shall be laid out so as to provide positive drainage away from all building areas and individual lot drainage shall be coordinated with the general drainage system for the area in compliance with Section 7200 of the Williamson County Zoning Ordinance.

8. Debris and Waste

Commercial dumpsters shall be provided on site by bonded developer for debris and waste. No debris or waste material caused by construction shall be left in any area of the subdivision at the time of expiration of the maintenance bond. Removal may also be required in areas in which substantial buildout/occupancy has occurred.

9. Fencing

Each subdivider and/or applicant shall be required to furnish and install fencing wherever the Planning Commission determines that a hazardous condition exists. The fences shall be constructed according to standards established by the County Engineer, and shall be noted as to height and materials on the final plat.

10. Bodies of Water

If a tract being subdivided includes a body of water, lot lines shall be drawn so that the entire body of water is controlled in one of the following ways.

a. Ownership and control shall be vested in one property owner within the subdivision, in which case the parcel containing the body of water may also be a building site, provided other requirements of these regulations and the Williamson County Zoning Ordinance are

met.

b. An agreement is reached whereby the property owners within the subdivision all have an equal undivided interest in the parcel containing the body of water.

c. Where the body of water is or will be an integral component of the publicly controlled storm water drainage system, public rights to the parcel shall be secured through dedications or fee simple ownership. When less than fee simple public rights are secured, an agreement shall be reached which clearly delineates subdivision property owners' rights to use of the body of water, and limits of public and private maintenance, responsibilities and liabilities, and such agreement shall be noted on the final plat.

d. However control of the body of water is determined, an access route to the body of water shall be reserved by easement for the use of emergency and maintenance vehicles.

5.3 Roads

1. General Requirements

These requirements shall apply to roads within or providing principle access to proposed subdivisions.

a. Lot Access and Frontage - No subdivision shall be approved unless each lot created conforms to, at minimum, the dimensional requirements of this Regulation and the Zoning Ordinance.

b. The Planning Commission at its discretion may approve a minor subdivision on a substandard road (road not meeting subdivision road standards) provided: (1) such road existed at the time these regulations were adopted and (2) the Planning Commission receives adequate assurances that the road is at, or will be improved to either subdivision standards or county road standards defined herein. In its deliberation, the Planning Commission shall consider the number of building sites served, the density of development served, the potential development (on existing vacant legal building sites), and the potential for additional subdivision of land accessible by the substandard road.

c. Where a publicly maintained road which is to be the principal access to a proposed conventional subdivision is inadequate, the Planning Commission shall require assurances for the necessary upgrading of the access road as a condition of approval of the final plat.

d. All required public road improvements on newly constructed roads shall be constructed in accordance with the Williamson County Roadway and Drainage Regulations and Procedures which are a part of these Subdivision Regulations. (See Appendix F.)

e. Roads with curbed sections as specified in the Williamson County Roadway and Drainage Specifications shall be required in all subdivisions with public sewers and having lot sizes 30,000 square feet or less.

f. Topography and Arrangement:

i. Local roads shall be curved wherever possible to avoid conformity of lot appearance. All streets shall be arranged so as to obtain the maximum number of building sites at or above the grades of the streets. Grades of streets shall relate as closely as possible to the original topography. A combination of steep grades and curves shall be avoided. See Roadway & Drainage Specifications for specific design standards.(See Appendix F.)

ii. All streets shall be properly integrated with the existing and proposed system of arterial and collector streets as shown on the County Road Plan and other planning and design documents.

iii. Local streets shall be laid out to relate as much as possible to the topography, to discourage use by through traffic, to permit efficient drainage and utility systems, and to require the minimum number of streets necessary to provide convenient and safe access to property.

iv. The rigid rectangular gridiron pattern should not necessarily be adhered to, and the use of curvilinear streets, cul-de-sacs, or U-shaped streets should be encouraged where such use will result in a more desirable layout.

v. Proposed streets shall be extended to the boundary lines of the tract, unless otherwise specifically approved by the Planning Commission. See Section 5.3.1.i.iii, herein.

vi. In areas of extreme topography such as hilltops and ridge lines, upon recommendation by the County Engineer, a road with a reduced cross-section may be utilized.

vii. In commercial and industrial developments, the streets and other access ways shall be planned in connection with the grouping of buildings, location of rail facilities, and the provision of alleys, truck loading and maneuvering areas, walks and parking areas so as to minimize conflict of movement between the various types of traffic, including pedestrian.

g. Blocks

i. Blocks shall have sufficient width to provide for two (2) tiers of lots of appropriate depth. Exceptions to this prescribed block width shall be permitted in blocks adjacent to major thoroughfares, railroads, waterways, or blocks in which the rear lot lines abut an unsubdivided tract of land.

ii. The lengths, widths, and shapes of blocks shall be such as are appropriate for the locality and the type of development contemplated, but block lengths in residential areas shall not exceed one thousand six hundred (1,600’) feet, nor be less than four

hundred (400') feet in length. In general all intersections of local streets and collectors with arterials should be at least one thousand (1,000') feet apart.

iii. In long blocks, the Planning Commission may require the reservation of an easement through the block to accommodate pedestrian or bicycle traffic to provide circulation or access to schools, playgrounds, shopping centers, transportation, or other community facilities.

h. Access to Arterials

Where a subdivision borders on or contains an existing or proposed arterial street, the Planning Commission may require that access to such streets be limited by one of the following means:

i. The subdivision of lots so as to back onto the arterial and front onto a parallel local street; no access shall be provided along the rear property line of such lots.

ii. A series of cul-de-sacs, U-shaped streets or short loops entered from and designed generally at right angles to such parallel street with the rear lines of their terminal lots backing onto the principal arterial.

iii. A marginal access or service road which is separated from the primary arterial by a planting or grass strip and having access thereto at suitable points.

i. Road Names

The naming of roads within a proposed subdivision shall be primarily the applicant's responsibility; however, the Planning Commission shall approve the names of all roads shown on the final plat following staff examination.

i. Roads which are or are planned to be a continuation of an existing road shall bear the same name.

ii. The name of new roads shall be sufficiently different in spelling and sound so as not to be confused with existing roads anywhere in Williamson County, including roads maintained by incorporated cities within Williamson County. The applicant should obtain the help of the Planning Office.

iii. Road name suffixes shall be determined according to the following formula:

Close - a short cul-de-sac less than 100' in length

Park - a short cul-de-sac less than 100' in length

Place - a short cul-de-sac less than 100’ in length

Way - a short cul-de-sac less than 100' in length

Terrace - a short cul-de-sac less than 300' in length

Lane - a non-thru street over 300' in length

Court - a short cul-de-sac less than 500’ in length

Trail - a through street between two roads, with no other side streets

Pass - a through street between two roads, with no other side streets

Road - through street or connector

Drive - through street or connector

Street - through street or connector

Boulevard - through street with at least four lanes

Avenue - through street with at least four lanes

Highway - through street over two miles long

iv. Proposed road names shall be submitted upon approval of preliminary plat for approval by Staff. At that time, street addresses shall be assigned by Staff for inclusion on the final plat.

j. Road Regulatory Signs

The provision of necessary road regulatory signs or publicly maintained roads within a subdivision shall be the responsibility of the applicant with approval of the Williamson County Engineer. Intersection/stop/yield signage shall be installed prior to the issuance of the first building permit.

k. Reserve Strips

Reserve strips may not be created adjacent to a proposed street so as to deny access from adjacent property to such street, except as permitted by the Planning Commission.

l. Construction of Roads and Dead-End Roads

i. Construction of Roads- The arrangement of streets shall provide for the continuation of principal streets between adjacent properties when such continuation is necessary for convenient movement of traffic, effective fire protection, efficient provision of utilities, and where such continuation is in accordance with adopted

plans. If the adjacent property is undeveloped and the street must be a dead- end street temporarily, the right-of-way shall be extended to the property line. An appropriate temporary turnaround and signage may be required where deemed necessary in accordance with l.iii. following.

ii. Permanent Dead-End Roads - When a road does not extend to the boundary of the subdivision and its continuation (immediately or in the future) is not required by the Planning Commission for access to adjacent property, its terminus normally shall be of sufficient distance from such boundary to allow for appropriate development of the intervening land. A permanent turnaround shall be provided at the end of all permanent dead-end roads. Circular turnarounds shall be provided whenever possible; however, where appropriate, other types of turnarounds may be approved. In predominately developable areas where connections of local roads are not restricted because of topographic constraints, the following table shall govern maximum cul-de-sac length:

TABLE V-I

AVERAGE LOT SIZE	MAXIMUM LENGTH
400,000 SF (+)	2500’
200,000 SF	2000’
40,000 SF	1300’
20,000 SF	900’
14,000 SF (-)	800’

In cases of significant topographic constraints, the Planning Commission may waive these maximum lengths.

All permanent dead-end roads shall be so designated with appropriate signage on the roads. Long dead-end roads, particularly those with sub-roads, may require additional signs.

iii. Temporary Dead-End Roads- When a road is approved as a Temporary Dead-End and eventual connection to adjoining property is indicated by the Planning Commission, then such dead-end shall meet the following criteria:

* No permanent turn-around area shall be provided. The Road shall be built to the edge of the property line with temporary turn around-area provided.

* A barricade shall be erected with a sign of permanent construction stating "Future Through Street, Subject to Extension by Williamson County for Traffic Safety and Public Access". Said signage's lettering shall be a minimum of 1.5" in size.

Temporary dead-ends may exceed the length noted in Table V-I, as approved by the Planning Commission.

All temporary dead-ends shall be so designated with appropriate signage at the entrance to the roads. Long dead-end roads, particularly those with sub-roads, may require additional signs.

If an applicant is required to extend a temporary cul-de-sac to obtain proper traffic circulation, the Planning Commission may require the applicant to construct sidewalks on the former temporary cul-de-sac to insure safe pedestrian circulation.

iv. Access to Publicly Maintained Roads- Within a proposed subdivision, no new roads shall be accepted for public maintenance when such roads are not directly accessible by an existing publicly maintained road.

m. Construction of fences, gates, entrance walls, or other obstructions deemed hazardous to the motoring public shall not be permitted in the road right-of-way. Determination of hazardous conditions shall be made by the Road Superintendent and the County Engineer. (See Williamson County Highway Law, Section 13: Adopted 1974.)

2. Design Standards

a. General Requirements - In order to provide for roads of suitable location, width, and improvement to accommodate prospective traffic and afford satisfactory access for emergency services, sanitation, and road maintenance equipment, and to coordinate roads so as to compose a convenient system and avoid undue hardships to adjoining properties, the minimum design standards for public roads designated in the Roadway and Drainage Specifications are required.

b. Minimum Design Standards - All public roads shall be designated at a minimum design speed of 30 mph, per AASHTO, unless otherwise varied by the Planning Commission after consultation with County Engineer.

c. Maximum Grades - Grades for residential streets may not exceed ten percent (10%). Grades for streets serving commercial or industrial uses shall not exceed seven percent (7%). Upon a finding of extreme topographical or environmental conditions, these maximum grades may be altered by variance by the Planning Commission.

d. Road Surfacing and Improvements - All road pavements, shoulders, drainage improvements and structures, curbs, and turnarounds shall conform to all construction standards contained In the Williamson County Roadway and Drainage Specifications and Procedures which are a part of these regulations.

e. Excess Rights-of-Way - Right-of-way widths in excess of the standards designated in these regulations shall be required whenever, due to topography, additional width is necessary to provide adequate earth slopes. Such slopes shall not be in excess of three (3) to one (1).

f. Intersections

i. Streets shall be laid out so as to intersect as nearly as possible at right angles. A proposed intersection of two (2) new streets at an angle of less seventy-five (75) degrees shall not be acceptable. An oblique street should be curved approaching an intersection and should be approximately at right angles for at least one hundred (100') feet there from. Not more than two (2) streets shall intersect unless specifically approved by the Planning Commission.

ii. Proposed new intersections along one side of an existing street shall, wherever practicable, coincide with any existing intersections on the opposite side of such street. Street jogs with centerline offsets of less than 150 feet are not encouraged.

iii. Intersections shall be designed with a flat grade wherever practical. In hilly or rolling areas, a leveling area not to exceed 3% in grade shall be required.

iv. Where any street intersection will involve earth banks or existing vegetation inside any lot corner that would create a traffic hazard by limiting visibility, the applicant shall eliminate these obstructions in connection with the grading of the public right-of-way to the extent deemed necessary to provide adequate sight distance.

v. All intersections are subject to the provisions of Section 8450 of the Zoning Ordinance as it relates to clear view of intersecting streets.

3. Road Dedications and Reservations

a. Private Streets- There shall be no private streets platted in any subdivision unless approved by the Planning Commission as provided in the Zoning Ordinance.

b. Widening and Realignment of Existing Roads- Where a subdivision borders an existing narrow road or when the plan indicates the realignment or widening of a road that would use some of the land in a proposed subdivision, the applicant shall be required to provide for the land necessary for such widening or realignment and, in the case of a local road, may be required to improve such widened or realigned road. Depending on potential traffic generated, existing roads must be brought up to either subdivision standards, confirmed herein, or to County Road Standards defined herein.

c. Dedication of New Roads- Prior to final approval of a subdivision plat or release of the maintenance bond (whichever occurs last) all public roads shall be completed and offered for dedication. Formal acceptance shall be in accordance with 4.4 herein.

4. Minimum Street Requirements for Issuance of Building Permits

No building permits shall be issued until the applicant has completed construction of the road subgrade as defined herein, and installation of the storm water drainage system, as defined in

Section 5.4, herein. Building permits may only be issued upon inspection by the County Engineer confirming that this requirement has been met, and receipt by Building and Codes Department of notice that such installation has occurred.

5.4 Drainage, Storm Sewers and Floodplain

1. General Requirements

The Planning Commission shall not approve any plat of subdivision which does not make adequate provisions for storm or flood water runoff channels or basins which as a minimum insures that the site runoff during and after construction does not increase above that which was existing prior to construction and that flooding upstream and downstream will not increase.

a. The review and approval of drainage plans for proposed subdivision shall be the responsibility of the County Engineer and such approval shall be based on the requirements in the Roadway & Drainage Specifications of Williamson County (Appendix F) and Division 7200 of the Williamson County Zoning Ordinance.

b. The review and approval of drainage plans should generally include the following:

i. The type of drainage facilities proposed (i.e., open drainage versus storm sewers).

ii. The off-site impacts both upstream and downstream from the development.

iii. On-site or off-site improvements necessary to accommodate upstream drainage.

iv. Possible problems due to localized poor drainage or features such as sinkholes or wetlands.

v. No construction shall be performed in such a manner as to materially increase the degree of flooding in its vicinity or in other areas whether by flow restrictions, increased run-off or by diminishing retention capacity.

vi. Applicants will coordinate drainage plans with any existing drainage plans or studies within the county.

vii. Funds-in-lieu of detention may be required as an acceptable alternative to the construction of on-site drainage facilities, as recommended by the County Engineer.

2. Dedication of Drainage Easements

a. General Requirements

Where a subdivision is traversed by a watercourse, drainage way, channel or stream, there shall be provided a storm water easement or drainage right-of-way conforming substantially to the lines of such watercourse, and of such width and construction as will be adequate for

the purpose. Whenever possible, it is desirable that the drainage way be maintained by an open channel with landscaped banks and adequate width for maximum potential flow.

b. Drainage Easements

i. Where topography or other conditions make inclusion of drainage facilities within the road right-of-way impractical, perpetual unobstructed easements of appropriate width for such drainage facilities shall be provided across property outside the road lines and with satisfactory access to the road. Easements shall be carried from the road to a natural watercourse or to other drainage facilities.

ii. The applicant shall dedicate, either in fee simple or by drainage or conservation easement, land on both sides of existing watercourse, to a distance to be determined by the Planning Commission. When appropriate, maintenance of these easements will be the responsibility of the owners' association.

iii. Along waterways, low-lying land subject to flooding or periodic overflow during storm periods, whether or not included in areas for dedication, shall be preserved and retained in their natural state as areas for drainage.

3. Erosion/Siltation Control

In all proposed subdivisions the applicant shall give careful consideration to the control of erosion. Such consideration shall include those steps necessary to prevent erosion during the development of the subdivision, and the design of the subdivision and drainage system so as to avoid subsequent erosion problems after the subdivision is completed.

a. Erosion Control Plan- Prior to the approval of the preliminary plat, the Planning Commission shall require an erosion/siltation control plan to minimize erosion during construction of the subdivision. After an erosion control plan is prepared, such plan shall be approved by the County Engineer prior to the initiation of any grading or construction work within the subdivision.

In addition, it is the responsibility of the applicant to develop typical erosion/siltation control plans for each building lot. These plans shall prescribe minimum standards that the lot developer will be expected to meet. Failure to adhere to these minimum standards will result in a "stop work order" until erosion/siltation control is installed.

b. Improvements for Permanent Erosion Control- The Planning Commission may require, as necessary, structural or other improvements designated to prevent or minimize long term erosion and siltation from within the subdivision. All required improvements shall be included in the performance bond. In determining appropriate improvements for controlling erosion and siltation, the County Engineer and the Soil Conservation Service shall be consulted extensively.

4. Floodplain

The Planning Commission shall not approve the subdivision of land if in its opinion building or structures would be damaged by flood waters. Land subdivided with building or structures is strictly prohibited within the area designated as the one hundred (100) year floodplain; as identified by current U. S. Army Corps of Engineers Studies, FEMA Flood Studies and maps, or any other recognized and accepted studies by or for this Regional Planning Commission. Included is any encroachment by embankment to obtain elevations above the one hundred (100) year flood elevation. No filling whatsoever is allowed within the one hundred (100) year flood line.

Structures built on land subdivided within the five hundred (500) year floodplain as recognized in the studies mentioned above shall have a minimum elevation on the floor occupied by its inhabitants, of three (3) feet above the one hundred (100) year floodplain. This shall be noted on the final plat by means of building envelopes and elevations for such building sites. In addition all requirements of Section 7111 of the Williamson County Zoning Ordinance shall apply.

5.5 Water Facilities

1. General Requirements

a. No subdivision shall be approved until provisions are made for an adequate water supply for domestic use.

b. All water facilities within a proposed subdivision shall be consistent with the recommendations of the Williamson County Water Plan as adopted. Where the subdivision affects or is affected by a major water facility, the Planning Commission and County Engineer shall determine the extent of the applicant's financial responsibility in the provision of the facility. Major water facilities which will be of primary benefit to the applicant will be the applicant's responsibility solely. Off-site water system improvements may be required of the applicant to ensure adequate water service to the subdivision.

c. The requirements of Section 5250 of the Williamson County Zoning Ordinance must be met.

d. All public water mains within a subdivision shall be rated for a minimum of two hundred (200) p.s.i. and at least six (6) inches in diameter except as otherwise approved by the Planning Commission as recommended by the County Engineer. All feeder and trunk lines shall be a minimum of six (6) inches in diameter.

e. An adequate system of water mains shall be provided as part of the establishment to provide for adequate water and fire protection. Every attempt shall be made to establish a gridiron layout, preferably "looped" with a minimum of dead-end lines.

f. Gate valves of the same size as the main on which it is installed shall be provided on all water lines. Gate valves shall be provided at all intersections (minimum of two [2] per

intersection) and at intervals of 1,000 feet.

g. Service connections shall be provided for each lot of the subdivision. A service connection shall consist of a corporation stop, a minimum of three-fourths (3/4) inch service line of sufficient length to extend to the lot line, back plow preventer valve, and a standard meter box at the lot line.

h. All dead-end water lines shall have a one (1) inch blow-off installed.

2. Existing Water System

Before taking action on a proposed subdivision which is to be served by a public water facility the Planning Commission shall, at the applicant's expense, determine whether the facility can adequately serve the proposed subdivision without adversely affecting service to existing customers.

No subdivision shall be approved where it will adversely affect water service to existing customers. Specifically, this refers to conditions that are below standards set by Tennessee Department of Environment and Conservation, and Williamson County.

3. Fire Protection

To insure that there will be an infrastructure for a proper fire protection system in the future and to help facilitate such a system, water mains, valves and fire hydrants shall be installed. Unless building envelopes are separated by a distance of 200' or greater, then fire hydrants shall not be spaced more than five hundred feet (500') apart unless homes in the subdivision are equipped with individual sprinkler systems. If sprinkler systems are present, the fire hydrants may be spaced no more than one thousand feet (1000') apart; and noted on the final plat. Fire hydrant spacing shall be measured along a road and shall be so located that they will be accessible, protected from traffic hazards, and will not obstruct walls, roadways, or parking facilities. No dwelling shall be located more than one thousand (1,000') feet from a fire hydrant.

4. Dedication of Facilities

All water facilities shall be constructed to the standards and specifications adopted by Tennessee Department of Environment and Conservation, applicable utility districts/companies and Williamson County. Water facilities serving all conventional subdivisions shall be publicly dedicated and each separate building site shall be directly served by a public water line.

5. Major Subdivisions Without Public Water

Where major subdivisions are proposed in areas where public water is not available, the following criteria must be met:

a. Lot areas must be excess of five acres;

b. Building envelopes must be located a minimum of 200' apart;

c. Deleted

d. The final plat shall state: Public potable water is not available for this site. Williamson County bears no responsibility when approving this plat that a dedicated source of potable water is available.

6. Water in Minor Subdivisions

a. Where public water is available, the responsible utility vendor must provide a “Minor Water letter". (Appendix C-2.)

b. A fire hydrant must be located within 1000' of the proposed building envelope. The fire hydrant requirement may be waived if the building envelope is located 200' or greater from any existing or proposed dwelling.

c. The final plat shall state: Public potable water is not available for this site. Williamson County bears no responsibility when approving this plat that a dedicated source of potable water is available.

5.6 Sanitary Sewerage Facilities

1. General Requirements

a. No Subdivision shall be approved until provisions are made for the adequate disposal of wastewater from this site.

b. All on-site waste disposal systems shall be approved by the Department of Sewage Disposal Management, and all public sanitary sewer systems shall be approved by the County Engineer (or his designee), the suppliers' engineer, and the appropriate State authorities. The criteria for approval of on-site waste disposal systems by the Department of Sewage Disposal Management shall be the "Regulations Governing On-Site Sewage Disposal Systems of the Williamson County Department of Sewage Disposal Management (effective September 1, 2000). By reference, there regulations and all such amendments thereto are made a part of these subdivision regulations (See Appendix G).

c. All lots approved solely with on-site disposal systems shall have a minimum area as determined by the Williamson County Zoning Ordinance or that determined by the "Regulations Governing On-Site Sewage Disposal Systems of the Williamson County Department of Sewage Disposal Management", whichever is greater.

d. The on-site disposal system shall be located upon the lot it is intended to serve. Any off-site septic easements may only be approved via a variance to these regulations, as specified in Section 1.14. herein.

2. Provision of Sanitary Sewers

Once the Planning Commission determines that a proposed subdivision is in an area where public sewer service is planned, no subdivision shall be approved until the sewer requirements is satisfied. In addition the requirements of Section 5240 of the Williamson County Zoning Ordinance must be met.

When adequate connecting facilities are reasonably accessible the installation of sewers within the subdivision and connection to a system shall be required. When considering whether public sewer facilities are reasonably accessible, the following criteria are to be considered:

a. The governmental entity or utility company providing sewer service must issue written intent to service this subdivision; and

b. Unless otherwise waived by the Planning Commission, sewer service shall be considered reasonably available if any part of the proposed subdivision is within one thousand (1000') feet of public sewer, and if the routing of such sewer can occur via natural drainage or other acceptable routing.

3. Consistency with the Williamson County Water and Wastewater Plan as Adopted

To the greatest extent possible, new sewer improvements shall conform to the recommendations of the Williamson County Water and Wastewater Plan as adopted.

a. In cases of land disposal systems as identified in Williamson County Regulations for Wastewater Treatment and Land Disposal Systems, dated April 12, 2000 and as subsequently amended, no such systems shall be constructed except in conformance with these regulations and any subsequent amendments.

4. Standards and Dedications

All sewer facilities shall be constructed to the standards and specifications adopted by the Tennessee Department of Environmental Conservation, applicable Utility Districts and Williamson County. All such facilities shall be dedicated to the appropriate entity. Public sewers shall include a service connection for each lot at the property line.

5.7 Sidewalks

1. General Requirements

The provision of sidewalks is not a requirement of these regulations. However, in those instances where the applicant determines that the provision of such is in the best interests of the subdivision, the standards to follow shall govern.

2. General Standards

a. All sidewalks shall be located outside of the proposed right-of-way.

b. All sidewalks shall be constructed according to the specifications provided by the applicant, and approved by the County Engineer.

c. Maintenance of these sidewalks shall be the responsibility of a homeowners association, and such responsibility shall be noted on the final plat of the subdivision and the restrictive covenants governing this subdivision.

d. Sidewalk location shall be delineated on the final plat, and shall be within a designated access easement.

5.8 Street Lights

1. General Requirements

The provision of street lights is not a requirement of these regulations. However, in those instances where the applicant determines that the provision of such is in the best interests of the subdivision, the standards to follow shall govern.

2. General Standards

a. Street lights may be located within the proposed right-of-way.

b. Upon submission of preliminary plat, the applicant shall denote the following:

i. The proposed location of the street lights;

ii. The standard drawing of the street lights design to be utilized;

iii. A plan for replacement and maintenance of the street lights.

The Planning Commission, in their deliberations, may request additional information as area coverage and glare associated with the proposed street light system.

c. Maintenance of these street lights and their utility costs shall be the responsibility of a homeowners association, and such responsibility shall be noted on the final plat of the subdivision and the restrictive covenants governing the subdivision.

d. Street light location shall be delineated on the final plat.

5.9 Cable Utilities

1. Underground Cable Utilities

In order to reduce maintenance costs, reduce dangers from storm damaged cable utilities, and improve the visual quality of new subdivisions, applicants are encouraged to install cable utilities underground.

a. Provision of underground cable utilities shall be in accordance with the standards and specifications of the appropriate Electric Utility, South Central Bell Telephone, and when available, the local CATV franchise.

b. Where utilities are placed underground, the applicant's share of the cost shall be included in the performance bond if the utility does not require the applicant to pay for the cost on the commencement of the development.

2. Easements

a. Generally, cable utilities will be constructed within the road right-of-way. When such utilities will be outside the right-of-way, permanent utility easements of sufficient width shall be required, where necessary, to ensure the adequate provision of such services.

b. Whenever utility easements are provided along rear and side lot lines, normally such easements shall affect each abutting property equally.

5.10 Public Uses

Whenever a proposed subdivision is received by the Planning Commission, careful consideration shall be given to the need for public land in the area for parks, schools, or other public uses and whether a portion of the site being considered for development is appropriate for any public use. To reserve land there shall be a defined plan in existence by an appropriate authority for use of the land.

1. Reservation of Sites for Public Use- The Planning Commission may require the applicant to reserve, for future acquisition by Williamson County, any site which the Planning Commission considers suitable and necessary for future public use.

2. Acquisition of Reserved Sites- The acquisition of land reserved by a public agency on a final plat shall be initiated within twelve (12) months of notification, in writing, from the owner that he intends to develop the land. Such letter of intent shall be accompanied by a Concept plat of the proposed development and a tentative schedule of construction. Failure by the public agency to initiate acquisition within the prescribed 12 months shall result in the removal of the "reserved" designation from the property involved and the freeing of the property for development in accordance with these regulations.

5.11 Preservation of Natural Areas and Amenities

1. General

Existing features which would add value to residential development, such as trees, drainageways, streams, cemeteries, historic sites, stone fences, and similar irreplaceable assets, should be preserved to the greatest extent possible in the design of the subdivision, in addition to the natural resource and historic site preservation requirements of the Zoning Ordinance (refer to Articles V and VII). All natural resource areas (as defined in Article II and addressed in Article VII) as well as individual large trees (eighteen [18] inches in caliper or larger), stone fences, and other unique site features, shall be indicated on the preliminary and final plats prior to their approval and the initiation of grading and construction.

2. Trees Planted by the Applicant

In addition to the bufferyard and landscaping requirements of the Zoning Ordinance (refer to Article VII), the Planning Commission may require the applicant to provide plantings where appropriate, such as to provide buffering otherwise not required by the provisions of Article VII of the Zoning Ordinance. Such plantings shall be of a long-living variety, such as pine, oak, maple, ginkgo, native trees or other types approved by the Planning Commission.

5.12 Non-residential Subdivisions

In addition to the principles and standards in these regulations, which are appropriate to the planning of all subdivisions, the applicant shall demonstrate to the satisfaction of the Planning Commission that the street parcel, and block pattern proposed is specifically adapted to the uses anticipated and takes into account other uses in the vicinity.

1. Proposed industrial parcels shall be suitable in area and dimensions to the types of industrial development anticipated, and shall conform to all requirements of this Regulation and the Zoning Ordinance.

2. Street rights-of-way and pavement shall be adequate to accommodate the type and volume of traffic anticipated to be generated thereupon.

3. Special requirements may be imposed by the Planning Commission with respect to street, curb, gutter and sidewalk design and construction.

4. Special requirements may be imposed by the Planning Commission with respect to the installation of public utilities, including water, sewer, and storm drainage.

5. Every effort should be made to protect adjacent residential areas from potential nuisance from a proposed commercial or industrial subdivision, including the provision of extra depth in parcels backing up to existing or potential residential development as well as provisions for the permanent landscaped buffer strip required by this Regulation and the

Zoning Ordinance.

6. Streets carrying nonresidential traffic, especially truck traffic, shall not normally be extended to the boundaries of adjacent existing or potential residential areas.

AMENDMENTS TO SUBDIVISION REGULATIONS

Amendment	Date	Book/Page	Section/Division
Large Lot Major Subdivision on Private Driveway			
	12/12/96	III-3	Sec. 3. 1. d., & e.
	12/12/96	Form B-9	App. B
Time Limit Concept Plans	03/13/97	III-7	Sec 3.2.f
Number of Minor Subdivisions	03/13/97	III-1	See 3.1.a (iv)
Definition Small Major Subdivision			
	03/13/97	II-3	Sec 2- definitions
Definition Large Lot Major Subdivision			
	03/13/97	II-1	Sec 2 - definitions
Definition Major Subdivision	03/13/97	II-2	See 2 - definitions
Small Major Subdivision	03/13/97	III-4	Sec 3.1. e, i
Subdivision Forms	03/13/97	Forms 1-8	App. A
County Road Superintendent Signature			
	01/08/98	III-3	See 3.1(1)e (i) & e.6
	01/08/98	Form B-9	App. B
Signature Blocks - Street Names/Addresses			
	02/12/98	Form B-10	App. B
Final Plat Certificate Blocks			
	04/08/99	Form B-5	App. B
	04/08/99	Form B-10	App. B
Land Disposal Systems	05/11/00	IV-1	Sec 4.1(2)a.1.
	05/11/00	V-17	Sec 5.6(3)a.
Wastewater Treatment & Land Disposal Systems			
	05/11/00	full text	App. H
Wastewater Treatment & Land Disposal Systems			
	11/14/02	--	App. H
Wastewater Treatment & Land Disposal Systems			
	01/09/03	--	App. H

Permanent Monuments	09/11/03	II-2, V-2	App. B, Exhibit 2, 2A
Lots on Easements	12/11/03	II-1, III-1, III-2, A-41	Sec. 2.2, Sec. 3.1(1)a, Sec. 3.1(1)c, App. B
Remove Requirements for Builder Bonds	01/15/04	IV-4	Sec. 4.5
Wastewater Treatment & Land Disposal Systems	11/09/04	--	App. H
Wastewater Treatment & Land Disposal Systems	12/09/04	--	App. H
Wastewater Treatment & Land Disposal Systems	04/14/05	--	App. H
Off-Site Septic Easements	12/08/05	V-16, A-103	Sec. 5.6(1) b, c, d; App. G
Wastewater Treatment & Land Disposal Systems	02/09/06	--	App. H
Roadway Testing	07/13/06	A-56, A-61, A-63	App. F
Checklists/Certificates	09/14/06	Forms 3,4,7,8, A-42	App. A, App. B
Potable Water	12/14/06	V-14	Sec. 5.5(5)c, d; 5.5(6)c
Plat Digitalization	03/08/07	III-9, Form 4	Sec. 3.2(4)h; App. A
Wastewater Treatment & Land Disposal Systems	1/10/08	VI-1, A-91	Sec. 5.5.1; App. H

APPENDICES

Form 1, Appendix A

Major Subdivision Concept Plan Review Checklist

(Items required on the plat on or in conjunction with Concept Plan submitted)

Development Name_____ Location_____

Zoning Certificate No._____ Contact_____ Phone _____

Map ____ Group _____ Parcel _____ Current Zoning _____ Use Type_____
(As specified in Article IV, Use Regulations)

□ Department of Sewage Disposal Management Approval Form

□ Pre-Application Meeting Conference recommendations/requirements addressed (attached copy of Pre-App. Results form)

□ Fee Paid

□ Copy of Deed showing ownership, or deed plus owner's consent

□ Six (folded) copies of proposed plat

□ Drawn to scale of 1" = 100' on sheets of 18" x 24" showing the lot or area involved, including north arrow, date & scale

□ Location map shown on plat

□ Adjacent property owners identified on plat (including deed book and page numbers)

□ Zoning District, map and parcel number, and total acreage of original tract being subdivided shown on plat

□ Notations of existing rights-of-way, easements or other encumbrances

□ General road and lot pattern proposed, based on preliminary soil report

□ Show lot area for all lots

□ Preliminary Soils Map from W.C. Department of Sewage Disposal Management with preliminary calculations of the soils adjustment requirements of the Zoning Ordinance (Section 5220)

□ (USGS) Topo map or other topo information extended into adjacent properties

□ Proposed phasing of development _____ lots/year over _____ years

□ Areas within 100 year Floodplain, if applicable

□ Acreage of land to be subdivided _____ Number of lots _____

□ Water line extensions and improvements shown accompanied by hydraulic design data that meets requirements of the Zoning Ordinance (Section 5250)

□ Sewage disposal system required _____ or proposed _____ or not required _____

□ Name of subdivision and road names submitted to Emergency Management for approval

□ Subdivision appropriate in relation to Comprehensive Plan? Y / N Thoroughfare Plan? Y / N

□ Conforms to several requirements and minimum standards of design: Lot Size _____ Lot Dimensions _____ Street Grades _____

□ Water Letter from _____ Utility District

□ Location of all natural resource areas requiring protection under the provisions of Division 7100 and the Zoning Ordinance, including a preliminary calculation of the natural resources adjustment (Section 5210)

□ Preliminary calculation of the Highway Capacity Adjustments (Section 5230), sewer capacity adjustment (Section 5430) and any modification resulting from proposed developer improvements (Section 5260)

□ All required bufferyard area shown (Division 7400), indicating proposed opacity, width & number of plant units and/or structures. Location of permanent benchmark if property is within 100 year Floodplain

□ Staff determines all information has been provided

□ Application not accepted due to:

_____

_____

_____
Planning Staff

_____
Date

Every item on the checklist must be addressed, either by inclusion in the plan/plat, by letter, or by written explanation. FAILURE TO DO SO CONSTITUTES AN INCOMPLETE SUBMITTAL, AND INCOMPLETE SUBMITTALS ARE SUBJECT TO WITHDRAWL FROM CONSIDERATION.

R:\Subdivision Regulations\Checklists

Form 2, Appendix A

Subdivision Preliminary Plat Review Checklist

(Items required on the plat on or in conjunction with Concept Plan submitted)

Development Name_____ Location_____

Zoning Certificate No._____ Contact_____ Phone _____

Map ____ Group _____ Parcel _____ Current Zoning _____ Use Type_____
(As specified in Article IV, Use Regulations)

□ Fee Paid

□ Date of Concept/Site Plan Review _____

□ Copy of deed and owner's consent to subdivide (show owner's name on plat)

□ Six (folded) copies of Preliminary Plat and two copies of Concept Plan, if applicable

□ Scale boundary drawing at 1" = 100' (unless otherwise authorized) of the lot or area involved, including north arrow, date & scale

□ Conforms substantially with Concept Plan

□ Adjacent property owners identified on plat/plan, including deed book & page numbers

□ Bearing for lot lines and dimensions for lots shown on plat

□ Location map shown on plat

□ Any needed variances have been identified

□ All existing buildings, fences or other structures, easements, parks or other open spaces (including cemeteries), existing vegetation to be retained, and existing or proposed bodies of water, shown on plat

□ Bulk standards correct, including building envelopes (Division 6100)

□ Resource protection plan submitted (Division 7100)

□ Landscaping plan submitted (Division 7300) (May be deferred to final plat)

□ Signage plans submitted (Division 8100) (May be deferred to final plat)

□ Road requirements submitted (Division 8400)

□ Soil erosion and sedimentation control plans, and street, drainage and storm water run-off plans approved by County Engineer

□ Waste Water Treatment

- □ On-Site Septic- soil map and septic disposal areas approved by W.C. Department of Sewage Disposal Management
- □ Public Sewer- plans for proposed sewer facilities approved by appropriate supplier
- □ Non-traditional sewage disposal- approval letter from TDEC

□ $2,000 Review Fee

□ Plans for proposed sewer facilities approved by appropriate utility district, including letter (if applicable)

□ Plans for proposed water facilities approved by the appropriate utility district, including letter

□ Evidence of fire flows

□ Proposed water system, including size and general location of all water lines and location of fire hydrants on plat

□ Existing or proposed bodies of water properly designated

□ Location of natural drains, site of water shed being drained and proposed major drainage features shown on plat

□ Field run contour or aerial mapping with sufficient ground control with intervals of two (2) feet or less. (USGS contours are unacceptable.)

□ Location of floodplain, including FEMA parcel # and/or HEC/RAS results

□ Width, location and names of all existing and proposed streets shown on plat

□ Approval of street names by County Emergency Management

NOTE: Final Plat must show lot numbers and addresses of individual lots.

_____

_____

_____

Any omissions have been noted above.

_____
Planning Staff

_____
Date

Every item on the checklist must be addressed, either by inclusion in the plan/plat, by letter, or by written explanation. FAILURE TO DO SO CONSTITUTES AN INCOMPLETE SUBMITTAL, AND INCOMPLETE SUBMITTALS ARE SUBJECT TO WITHDRAWL FROM CONSIDERATION.

R:\Subdivision Regulations\Checklists

Form 3, Appendix A

Minor Subdivision Final Plat Review Checklist

(Items required on the plat on or in conjunction with Concept Plan submitted)

Development Name_____ Location_____

Zoning Certificate No._____ Contact_____ Phone _____

Map ____ Group _____ Parcel _____ Current Zoning _____ Use Type_____
(As specified in Article IV, Use Regulations)

Date of Final Approval _____

□ Fee Paid ($50.00)

□ Copy of deed

□ Four (folded) copies of proposed plat

□ Drawn to a scale of 1” = 100’ on sheets 18” x 24” showing the lot or area involved, including north arrow, date & scale

□ If any lot area is ≤ 20,000, a scale of 1’ = 50’ is required

□ Location map shown on plat (showing site in relation to area)

□ Zoning district, map and parcel number, and total acreage of original tract being subdivided shown on plat

□ Lot numbers and addresses of individual lots as assigned by IT Department shown on plat

□ Size and location of any existing and proposed water and sewer lines

□ Any easements for rights-of-way provided for public services or utilities

□ Road frontage or access easement requirements met

□ Bearings and distances of property lines and sufficient engineering data to locate all lines including curve data

□ The limitation and/or dimensions of all easements

□ Notation of any areas to be dedicated to public use

□ Lot lines, alleys, building setback lines and required setbacks noted

□ Adjacent property owners identified on plat, including deed book and page numbers

□ Dimensions to the nearest 100th of a foot and angles to the nearest second

□ Lines and names of all streets and roads as approved by County

□ Lot size in square feet and acres

□ Lots numbered in numerical order

□ Delineation and note for Waterway Natural Areas per the Storm Water Management Regulations

□ Calculated 100 Year Flood elevation and indication of all property so encumbered, if applicable. Indicate FEMA panel reference if not applicable.

□ Location and description of monuments

□ Error of closure statement (≤ 1:10,000)

□ Primary and secondary sewage disposal fields designed for each lot, if applicable

□ Certificate of Ownership and Dedication (signed). (See Appendix B-3)

□ Certificate of Accuracy (signed). (See Appendix B-4) (BLACK INK ONLY)

□ Department of Sewage Disposal Management Approval (stamped and signed). (See Appendix B-5)

□ Certificate of Approval for Recording (unsigned). (See Appendix B-8)

□ Minor Water Letter, if required. (See Appendix C-2)

□ Fire hydrants located properly, if required.

□ If a well is proposed, the final plat shall state: Public potable water is not available for this site. Williamson County bears no responsibility when approving this plat that a dedicated source of potable water is available.

□ Notation of any self-imposed or special requirements imposed on the lots

□ Properly located driveway entrance(s) and properly sized driveway culvert. (Contact Randy Hickman with W.C. Highway Department, 790-5596, for approval on County Roads; contact Randy Hazelwood, TDOT, 790-5517, for approval of State Routes.)

□ Approved subject to the following additions or corrections of deficiencies:

_____

_____

□ Disapproved for the following reason(s):

_____

_____

_____
Planning Staff

_____
Date

Every item on the checklist must be addressed, either by inclusion in the plan/plat, by letter, or by written explanation. FAILURE TO DO SO CONSTITUTES AN INCOMPLETE SUBMITTAL, AND INCOMPLETE SUBMITTALS ARE SUBJECT TO WITHDRAWL FROM CONSIDERATION.

R:\Subdivision Regulations\Checklists 9/14/2006

Form 4, Appendix A

Major Subdivision Final Plat Review Checklist

(Items required on the plat on or in conjunction with Concept Plan submitted)

Development Name_____ Location_____

Zoning Certificate No._____ Contact_____ Phone _____

Map ____ Group _____ Parcel _____ Current Zoning _____ Use Type_____
(As specified in Article IV, Use Regulations)

Date of Preliminary Plat Review_____

□ Fee Paid

□ Copy of deed and letter of owner's consent

□ Six (folded) copies of proposed plat, two copies of approved Preliminary Plat

□ Meets stipulations required by Preliminary Plat approval

□ Drawn to scale of 1" = 100' on sheets 18" x 24" showing the lot area involved, including north arrow, date & scale

□ If any lots are ≤ 20,000, a scale of 1" = 50' if required

□ Conforms substantially with Preliminary Plat

□ Submitted before expiration of Preliminary Plat approval

□ Location map shown on plat

□ Zoning district, map and parcel number and total acreage of original tract being subdivided shown on plat

□ Lot numbers and addresses of individual lots shown on plat

□ Size and location of any existing and proposed water and sewer lines

□ Any easements for rights-of-way provided for public services, utilities, and the disposal of surface water

□ Bearings and distances of property lines and sufficient engineering data to locate all lines, including curve data

□ The limitations and/or dimensions of all easements

□ Notation of any areas to be dedicated to public use

□ Lot lines, alleys and building setback lines and required setbacks noted

□ Adjacent property owners identified on plat, including deed book and page numbers

□ Dimensions to nearest 100th of a foot and angles to the nearest second

□ Lot sized in square feet and acres

□ Width and location of all existing and proposed streets

□ Lines and names of all streets and roads as approved by County

□ Street addresses assigned by IT Department shown on each lot

□ Lots numbered in numerical order

□ Location of permanent benchmark if property is within 100 year Floodplain

□ Location and description of monuments

□ Error of closure statement (≤1:10,000)

□ Calculation sheets showing all applicable intensity adjustments (Zoning Ordinance requirements) approved

□ Primary and secondary sewage disposal fields designated for each lot, if applicable

□ Certificate of Ownership and Dedication (signed) (See Appendix B-3) (BLACK INK ONLY)

□ Certificate of Accuracy (signed) (See Appendix B-4)

□ Delineation and note for Waterway Natural Area per the Storm Water Management Regulations

□ Storm Water Operation and Maintenance Plan

□ Certificate of Approval of Utility Systems (signed) (See Appendix B-6)

□ If a well is proposed, the final plat shall state: Public potable water is not available for this site. Williamson County bears no responsibility when approving this pat that a dedicated source of potable water is available.

□ Copy of State Operating Permit (Land Treatment Systems only)

□ Certificate of Approval of Streets (unsigned) (See Appendix B-6)

□ Certificate of Addresses and Approval of Subdivision Name and Street Names (unsigned) (See Appendix B-10)

□ Department of Sewage Disposal Management Approval (stamped and signed) (See Appendix B-5)

□ Certificate of Approval for Recording (unsigned) (See Appendix B-8)

□ Required physical improvements installed or bond in the amount of $_____ for Roads, Drainage and Erosion Control; $_____ for Water; $_____ for Sewer (if applicable); and $_____ for Landscaping

□ Funds-in-lieu of detention amount $_____

□ Water letter submitted and water plans approved in accordance with Section 5250 of Zoning Ordinance

□ Grading, Drainage and Erosion Control plans approved by County Engineer

□ Water plans approved by _____

□ Sewer plans approved by _____

□ Any variance requested and approved and so noted on plat

□ Identification of critical lots (i.e. lot encumbered by protected resources)

□ Schedule of driveway culvert sizes, if applicable

□ Fire hydrants located properly

□ Landscaping plans approved (Division 7300)

□ Signage plans approved (Division 8400)

□ HOA Documents submitted, as applicable

□ Road Requirements approved (Division 8400)

□ Statement of total mileage amount for each new road approved for the subdivision

□ Copy of approved final plat in .dwg format on recordable media and based on the Tennessee State Plane Coordinate System (to be provided following Planning Commission approval)

□ Staff determines the following additional information is required:

_____

_____

□ Staff determines all information has been provided

_____

Planning Staff

_____

Date

Every item on the checklist must be addressed, either by inclusion in the plan/plat, by letter, or by written explanation. FAILURE TO DO SO CONSTITUTES AN INCOMPLETE SUBMITTAL, AND INCOMPLETE SUBMITTALS ARE SUBJECT TO WITHDRAWL FROM CONSIDERATION.

R:\Subdivision Regulations\Checklists

9/14/2006

Form 5, Appendix A

Agricultural Subdivision Final Plat Review Checklist

(Items required on the plat on or in conjunction with Concept Plan submitted)

Name of Subdivision_____ Location_____

Zoning Certificate No._____ Contact_____ Phone _____

Map ____ Group _____ Parcel _____ Current Zoning _____ Use Type_____
(As specified in Article IV, Use Regulations)

Date Submitted for Approval _____

□ Fee Paid ($50.00)

□ Copy of deed

□ Proof of owner's consent, if owner is not applicant

□ Six (folded) copies of proposed plat

□ Drawn to scale of 1" = 100' on sheets 18" x 24" showing the lot or area involved, including north arrow, date & scale

□ Location map shown on plat, shown in relation to area

□ Zoning district, map and parcel number and total acreage of original tract being subdivided shown on plat

□ Lot numbers and addresses of individual lots as assigned by the IT Department shown on plat

□ Size and location of any existing and proposed water and sewer lines

□ Any easements for rights-of-way provided for public services or utilities

□ Road frontage or access easement requirements met

□ Bearings and distances of property lines and sufficient engineering data to locate all lines including curve data

□ The limitations and/or dimensions of all easements

□ Notation of any areas to be dedicated to public use

□ Lot lines, alleys, building setback lines

□ Adjacent property owners identified on plat, including deed book and page numbers

□ Dimensions to the nearest 100th of a foot and angles to the nearest second

□ Lines and names of all streets and roads as approved by County

□ Lot size in square feet and acres

□ Lots numbered in numerical order

□ Calculated 100 Year Flood elevation and indication of all property so encumbered, if applicable. Indicate FEMA panel reference in not applicable.

□ Location and description of monuments

□ Error of closure statement (≤1:10,000)

□ Primary and secondary sewage disposal fields designed for each lot

□ Certificate of Ownership and Dedication (signed) (See Appendix B-3)

□ Certificate of Accuracy (signed) (See Appendix B-4) (BLACK INK ONLY)

□ Department of Sewage Disposal Management Approval (stamped and signed) (See Appendix B-5)

□ Certificate of Approval of Recording (unsigned) (See Appendix B-8)

□ Minor Water Letter, if required (See Appendix C-2)

□ Fire hydrants located properly, if required

□ If a well is proposed, the final plat shall state: Public potable water is not available for this site. Williamson County bears no responsibility when approving this plat that a dedicated source of potable water is available.

□ Notation of any self-imposed or special requirements imposed on the lots

□ Properly located driveway entrance(s) and properly sized driveway culvert (Contact Randy Hickman with W.C. Highway Department, 790-5596, for approval on County roads; contact Randy Hazelwood, TDOT, 790-5517, for approval of State Routes)

□ Dedication of 50' for public road ROW indicated on plat, if applicable

□ Residual portion of the property indicated on the plat with metes and bounds description and so identified as the "residual lot"

□ Remaining number of permitted dwelling units and open space area that must be provided on the residual lot after the subdivision of the lots in the agricultural subdivision noted on the plat (as defined in the W.C. Subdivision Regulations). (See Section III, 3.1, 1, c, iii)

□ Approved subject to the following additions or corrections of deficiencies:

_____

_____

□ Disapproved for the following reason(s):

_____

_____

_____
Planning Staff

_____
Date

Every item on the checklist must be addressed, either by inclusion in the plan/plat, by letter, or by written explanation. FAILURE TO DO SO CONSTITUTES AN INCOMPLETE SUBMITTAL, AND INCOMPLETE SUBMITTALS ARE SUBJECT TO WITHDRAWL FROM CONSIDERATION.

R:\Subdivision Regulations\Checklists

Form 6, Appendix A

Small Major Subdivision Final Plat Review Checklist

(Items required on the plat on or in conjunction with Concept Plan submitted)

Name of Subdivision _____ Location_____

Zoning Certificate No._____ Contact_____ Phone _____

Map ____ Group _____ Parcel _____ Current Zoning _____ Use Type_____
(As specified in Article IV, Use Regulations)

Date of Preliminary Plat review _____ Acres _____ Lots _____

□ Fee Paid

□ Copy of deed

□ Six (folded) copies of proposed plat, two copies of approved Preliminary Plat

□ Meets requirements for Final Plat approval

□ Drawn to scale of 1" = 100' on sheets 18" x 24" showing the lot or area involved, including north arrow, date & scale

□ Conforms substantially with Preliminary Plat

□ Submitted before expiration of Preliminary Plat approval

□ Location map shown on plat

□ Zoning district, map and parcel number and total acreage of original tract being subdivided shown on plat

□ Lot numbers, GIS numbers and addresses of individual lots shown on plat

□ Size and location of any existing and proposed water and sewer lines

□ Any easements for rights-of-way provided for public services, utilities and the disposal of surface water

□ Bearings and distances of property lines and sufficient engineering data to locate all lines including curve data

□ The limitations and/or dimensions of all easements

□ Notation of any areas to be dedicated to public use

□ Lot lines, alleys, building setback lines

□ Adjacent property owners identified on plat, including deed book and page numbers

□ Dimensions to the nearest 100th of a foot and angles to the nearest second

□ Lot size in square feet and acres

□ Width and location of all existing and proposed streets

□ Lines and names of all streets and roads as approved by County

□ Street addresses assigned by IT Department shown for each lot

□ Lots numbered in numerical order

□ Location of a permanent benchmark if property is within 100 Year Floodplain. Calculated 100 Year Flood elevation and indication of all property so encumbered, if applicable. Indicate FEMA panel reference if not applicable.

□ Error of closure statement (≤1:10,000)

□ Primary and secondary sewage disposal fields designated for each lot, if applicable

□ Certificate of Ownership and Dedication (signed) (See Appendix B-3)

□ Certificate of Accuracy (signed) (See Appendix B-4)

□ Certificate of Approval of Utility Systems (signed) (See Appendix B-6)

□ Certificate of Approval of Streets (unsigned) (See Appendix B-6)

□ Department of Sewage Disposal Management Approval (stamped and signed) (See Appendix B-5)

□ Certificate of Approval of Recording (unsigned) (See Appendix B-8)

□ Required physical improvements installed or bond in the amount of $_____ for Roads, Drainage and Erosion Control; $_____ for Water; $_____ for Sewer (if applicable); and $_____ for Landscaping

□ Water Letter submitted and water plans approved in accordance with Section 5250 of Zoning Ordinance

□ Grading, drainage and erosion control plans approved by County Engineer

□ Street plans approved by County Engineer

□ Statement of total mileage amount for each new road approved for the subdivision

□ Water and/or Sewer plans approved by _____ Utility District and State of Tennessee

□ Any variances requested and approved and so noted on plat

□ Schedule of driveway culvert sizes, if applicable

□ Fire hydrants located properly

□ Landscaping plans approved

□ Signage plans approved

□ Road requirements approved

□ Staff determines the following additional information is required:

_____

_____

□ Staff determines all information has been provided

_____

Planning Staff

_____

Date

Every item on the checklist must be addressed, either by inclusion in the plan/plat, by letter, or by written explanation. FAILURE TO DO SO CONSTITUTES AN INCOMPLETE SUBMITTAL, AND INCOMPLETE SUBMITTALS ARE SUBJECT TO WITHDRAWL FROM CONSIDERATION.

R:\Subdivision Regulations\Checklists

Form 7, Appendix A

Large Lot Subdivision Final Plat Review Checklist

(Items required on the plat on or in conjunction with Concept Plan submitted)

Name of Subdivision _____ Location_____

Zoning Certificate No._____ Contact_____ Phone _____

Map ____ Group _____ Parcel _____ Current Zoning _____ Use Type_____
(As specified in Article IV, Use Regulations)

Date submitted for Final approval _____

□ Fee Paid

□ Copy of deed

□ Proof of owner's consent, if owner is not applicant

□ Six (folded) copies of proposed plat

□ One copy of plat, drawn to scale, depicting 5' contour intervals (USGS are unacceptable)

□ Drawn to scale of 1" = 100' on sheets 18" x 24" showing the lot or area involved, including north arrow, date & scale

□ Location map shown on plat (showing site in relation to area)

□ Zoning district, map and parcel number and total acreage of original tract being subdivided shown on plat

□ Lot numbers and addresses of individual lots as assigned by the IT Department shown on plat

□ Check here if Large Lot Major Subdivision is on a Private Driveway

- □ All lots ≥ 5 acres
- □ Lots with minimum road frontage are shown on the plat
- □ ≥ 200' between building envelopes/houses (or fire hydrants) shown
- □ Easement at least 50' width shown
- □ Signature blocks on plat: Certificate of Ownership and Dedications; Certificate of Accuracy; Review of soils map and letter of approval of plat by Department of Sewage Disposal Management; Signature of Utility System supplying water; Certificate of Approval for Recording; Notation stating road to be built and maintained jointly by all owners and not intended to become a public road

□ Size and location of any existing and proposed water and sewer lines

□ Water plans approved by _____ Utility District with $_____ bond

□ Wells- variance request of Subdivision Regulations (Section 5.5 (5)C)

□ Any easements for rights-of-way provided for public services or utilities

□ Road frontage or access easement requirements met

□ Bearings and distances of property lines and sufficient engineering data to locate all lines, including curve data

□ The limitations and/or dimensions of all easements

□ Notation of any areas to be dedicated to public use

□ Lot lines, alleys, building setback lines and required setbacks noted

□ Adjacent property owners identified on plat, including deed book and page numbers

□ Dimensions to the nearest 100th of a foot and angles to the nearest second

□ Lines and names of all streets and roads as approved by County

□ Lot size in square feet and acres

□ Lots numbered in numerical order

□ Delineation and note for Waterway Natural Area per the Storm Water Management Regulations

□ Calculated 100 Year Flood elevation and indication of all property so encumbered, if applicable

□ Location and description of monuments

□ Error of closure statement (≤1:10,000)

□ Primary and secondary sewage disposal fields designated for each lot

□ Certificate of Ownership and Dedication (signed) (See Appendix B-3) (BLACK INK ONLY)

□ Certificate of Accuracy (signed) (See Appendix B-4)

□ Department of Sewage Disposal Management Approval (stamped and signed) (See Appendix B-5)

□ Certificate of Approval of Utility District (signed) (See Appendix B-7)

□ Certificate of Approval of Streets (unsigned) (See Appendix B-6)

□ Certificate of Approval of Recording (unsigned) (See Appendix B-8)

□ Bonds set as required

□ Fire hydrants located properly, if required

□ If a well is proposed, the final plat shall state: Public potable water is not available for this site. Williamson County bears no responsibility when approving this plat that a dedicated source of potable water is available.

□ Any new road names approved by W.C. Department of Emergency Management

□ Notation of any self-imposed or special requirements imposed on the lots

□ Properly located driveway entrance(s) and properly sized driveway culvert (Contact Randy Hickman with W.C. Highway Department, 790-5596, for approval on County roads; contact Randy Hazelwood, TDOT, 790-5517, for approval of State Routes)

□ Dedication of 50’ for public road ROW indicated on plat, if applicable

_____

Planning Staff

_____

Date

Every item on the checklist must be addressed, either by inclusion in the plan/plat, by letter, or by written explanation. FAILURE TO DO SO CONSTITUTES AN INCOMPLETE SUBMITTAL, AND INCOMPLETE SUBMITTALS ARE SUBJECT TO WITHDRAWL FROM CONSIDERATION.

R:\Subdivision Regulations\Checklists

9/14/2006

Form 8, Appendix A

Minor Revision Final Plat Review Checklist

(Items required on the plat on or in conjunction with Concept Plan submitted)

Development Name_____ Location_____

Zoning Certificate No._____ Contact_____ Phone _____

Map ____ Group _____ Parcel _____ Current Zoning _____ Use Type_____
(As specified in Article IV, Use Regulations)

Date Submitted for Final Approval _____

□ Fee Paid ($50.00)

□ Copy of deed

□ Four (folded) copies of proposed plat and one copy of the plat being revised

□ Drawn to scale of 1" = 100' on sheets 18" x 24" showing the lot or area involved, including north arrow, date & scale

□ If any lot areas are ≤ 20,000, a scale of 1" = 50' is required

□ Location map shown on plat (showing site in relation to area)

□ Zoning district, map and parcel number and total acreage of original tract being subdivided shown on plat

□ Lot numbers and addresses of individual lots as assigned by the IT Department shown on plat

□ Size and location of any existing and proposed water and sewer lines

□ Any easements for rights-of-way provided for public services or utilities

□ Road frontage or access easement requirements met

□ Bearings and distances of property lines and sufficient engineering data to locate all lines including curve data

□ The limitation and/or dimensions of all easements

□ Notation of any areas to be dedicated to public use

□ Lot lines, alleys, building setback lines and required setbacks noted

□ Adjacent property owners identified on plat, including deed book and page numbers

□ Dimensions to the nearest 100th of a foot and angles to the nearest second

□ Lines and names of all streets and roads as approved by County

□ Lot size in square feet and acres

□ Lots numbered in numerical order

□ Calculated 100 Year Flood elevation and indication of all property so encumbered, if applicable.

□ Location and description of monuments

□ Error of closure statement (≤1:10,000)

□ Primary and secondary sewage disposal fields designated for each lot

□ Certificate of Ownership and Dedication (signed) (See Appendix B-3) (BLACK INK ONLY)

□ Certificate of Accuracy (signed) (See Appendix B-4)

□ Department of Sewage Disposal Management Approval (stamped and signed) (See Appendix B-5)

□ Certificate of Approval of Recording (unsigned) (See Appendix B-8)

□ Minor Water Letter, if required (See Appendix C-2)

□ Fire hydrants located properly, if required

□ Notation of any self-imposed or special requirements imposed on the lots

□ Purpose of revision

□ Note to void, vacate...

□ Approved subject to the following additions or corrections of deficiencies:

_____

_____

□ Disapproved for the following reason(s):

_____

_____

_____
Planning Staff

_____
Date

Every item on the checklist must be addressed, either by inclusion in the plan/plat, by letter, or by written explanation. FAILURE TO DO SO CONSTITUTES AN INCOMPLETE SUBMITTAL, AND INCOMPLETE SUBMITTALS ARE SUBJECT TO WITHDRAWL FROM CONSIDERATION.

R:\Subdivision Regulations\Checklists

9/14/2006

APPENDIX B-1

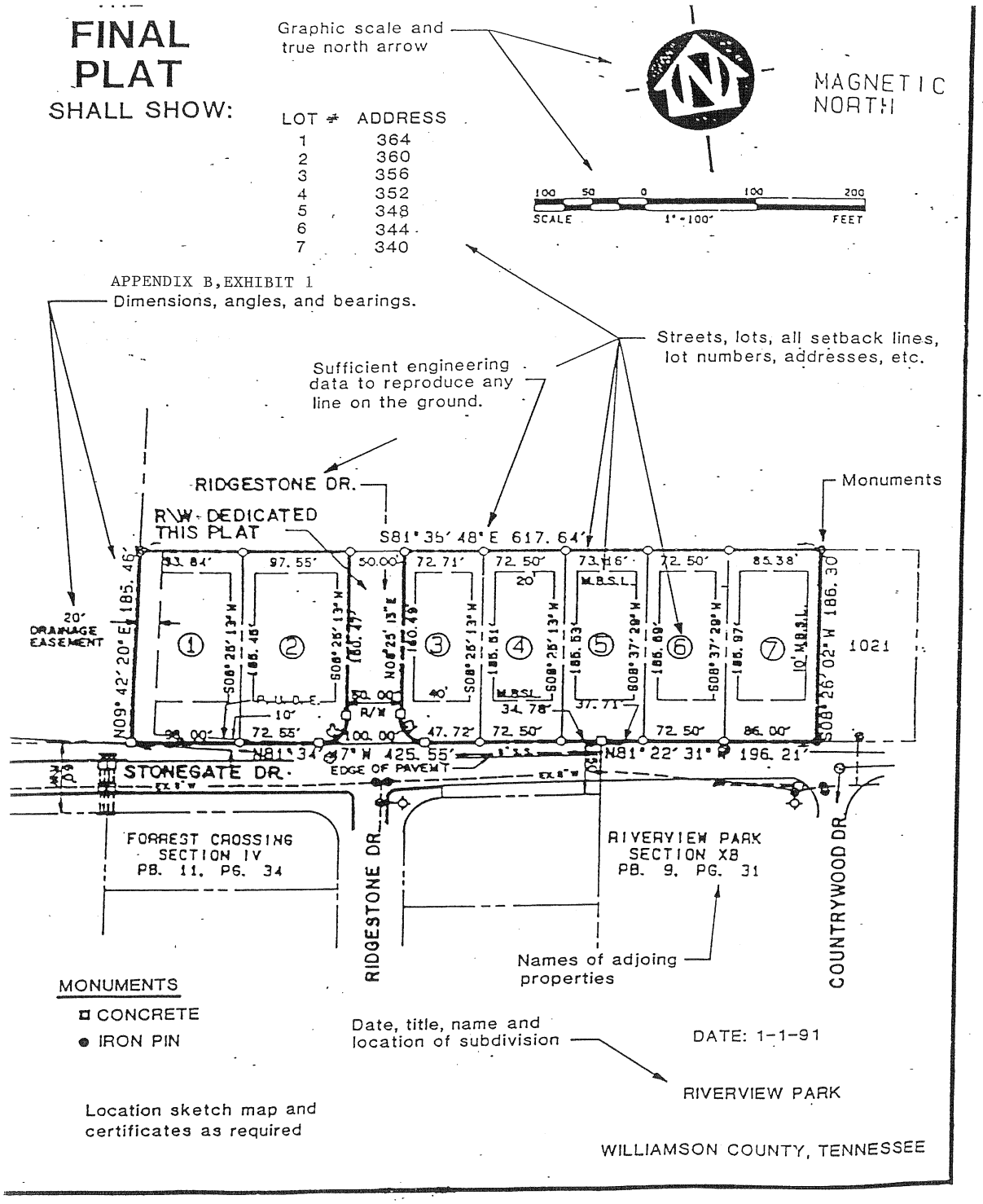
FINAL PLAT
SHALL SHOW:
Graphic scale and true north arrow
MAGNETIC NORTH
LOT # ADDRESS
1 364
2 360
3 356
4 352
5 348
6 344
7 340
SCALE 1" = 100' FEET
APPENDIX B,EXHIBIT 1
Dimensions, angles, and bearings.
Streets, lots, all setback lines, lot numbers, addresses, etc.
Sufficient engineering data to reproduce any line on the ground.
RIDGESTONE DR.
R\W DEDICATED THIS PLAT
Monuments
S81° 35' 48" E 617.64'
20' DRAINAGE EASEMENT
N09° 42' 20" E 185.46'
S08° 26' 02" W 186.30'
1021
N81° 34' 47" W 425.55'
N81° 22' 31" W 196.21'
STONEGATE DR.
EDGE OF PAVEMENT
FORREST CROSSING SECTION IV PB. 11, PG. 34
RIDGESTONE DR
RIVERVIEW PARK SECTION X8 PB. 9, PG. 31
COUNTRYWOOD DR
Names of adjoing properties
MONUMENTS
CONCRETE
IRON PIN
Date, title, name and location of subdivision
DATE: 1-1-91
RIVERVIEW PARK
Location sketch map and certificates as required
WILLIAMSON COUNTY, TENNESSEE

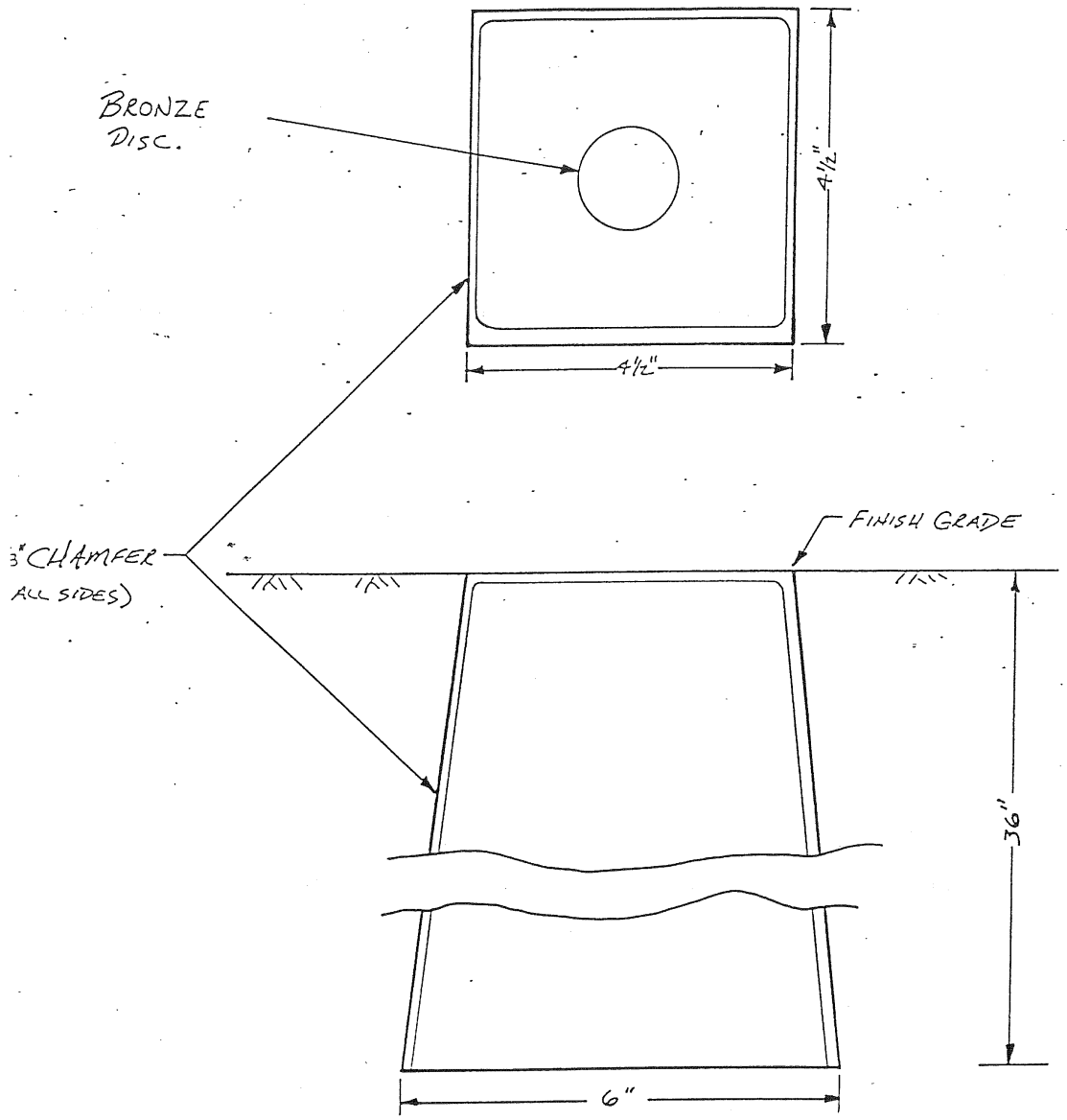

APPENDIX B
EXHIBIT 2

WILLIAMSON COUNTY
PLANNING COMMISSION

CONCRETE MONUMENT
DETAIL

SCALE: 1" = 2"

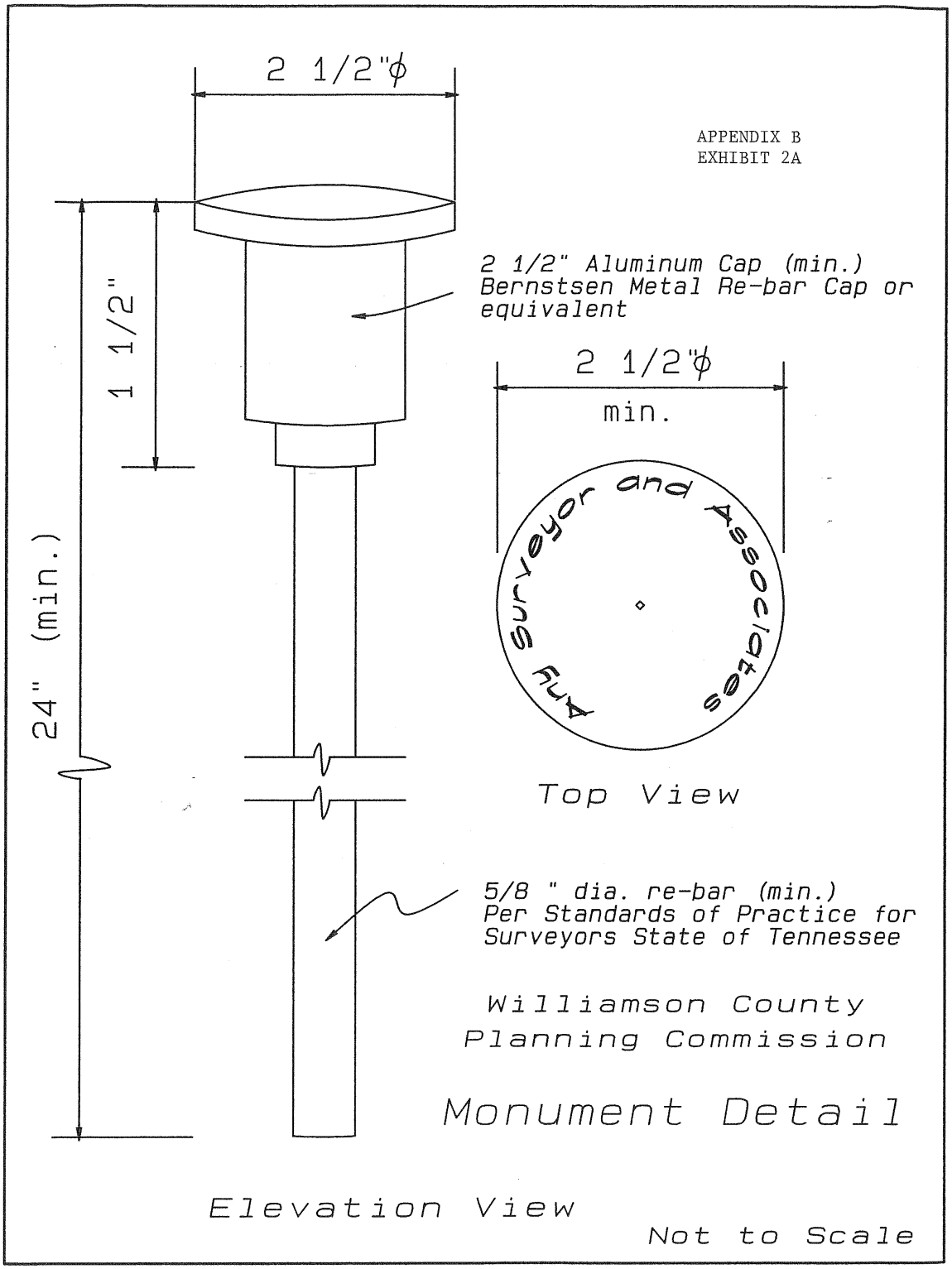
2 1/2"ϕ
APPENDIX B
EXHIBIT 2A
2 1/2" Aluminum Cap (min.)
Bernstsen Metal Re-bar Cap or
equivalent
1 1/2"
2 1/2"ϕ
min.
Surveyor and Associates
24" (min.)
Top View
5/8 " dia. re-bar (min.)
Per Standards of Practice for
Surveyors State of Tennessee
Williamson County
Planning Commission
Monument Detail
Elevation View
Not to Scale

APPENDIX B-3

CERTIFICATE OF OWNERSHIP AND DEDICATION

I (we) hereby certify that I am (we are) the owner (s) of the property shown and described hereon. as evidenced in book number, page, R.O.W.C., and that I (we) hereby adopt this plan of subdivision with my (our) free consent, establish the minimum building restriction line, and that offers of irrevocable dedication for all public streets, utilities and other facilities have been filed as required by these Regulations.

_____, 20____	_____
Date	Owner Signature
_____	_____
Owner Name (Printed)	Title (if acting for partnership or corporation)

APPENDIX B-4

CERTIFICATE OF ACCURACY

I hereby certify that the plan shown and described hereon is true and correct survey to the accuracy required by the Williamson County, Tennessee Regional Planning Commission and that the monuments have been or will be placed as shown hereon, to the specifications of the subdivision Regulations, as approved by the County Engineer.

_____, 20____ _____

Date Registered Land Surveyor

APPENDIX B-5

Certification of General Approval for Installation of Subsurface Sewage Disposal Systems with Restrictions

General approval is hereby granted for lots proposed hereon as being suitable for subsurface sewage disposal with the listed and/or attached restrictions.

Before the initiation of construction, the location of the house or other structure and plans for the subsurface sewage disposal system shall be approved by the local health authority.

_____ _____

Date Dept. Of Sewage Disposal Management

APPENDIX B-6

CERTIFICATION OF THE APPROVAL OF STREETS

I hereby certify: (1) that all streets designated on this final subdivision plat have been installed in an acceptable manner and according to Williamson county Roadway and Drainage Regulations, or (2) that a surety bond has been posted with the Planning Commission to assure completion of all required improvements in case of default.

_____, 20_____
Date

_____
County Engineer

_____
County Road Superintendent

APPENDIX B-7

CERTIFICATE OF APPROVAL OF UTILITY SYSTEMS

I hereby certify that the following utility systems outlined or indicated on the final subdivision plat entitled have been installed in accordance with current local and/or state government requirements or that a surety bond has been posted with the Planning Commission to assure completion of all required improvements in case of default. Also, I certify that the hydraulic design criteria specified in Section 5.5 of Williamson County Subdivision Regulations have been met.

Water System _____, 20____ _____

Name, Title, and Agency of
Authorized Approving Agent

Sewer System _____, 20____ _____

Name, Title, and Agency of
Authorized Approving Agent

APPENDIX B-8

CERTIFICATE OF APPROVAL FOR RECORDING

I hereby certify that the subdivision plat shown hereon has been found to comply with the Subdivision Regulations for Williamson County, Tennessee, with the exception of such variances, if any, as are noted in the minutes of the Planning Commission and that it has been approved for recording in the office of the County Register.

_____, 20_____ _____

Date Secretary, Planning Commission

THIS APPROVAL SHALL BE INVALID IF NOT RECORDED BY _____

Date

APPENDIX B-9

PRIVATE DRIVEWAY NOTATION

This is a private driveway and is not a public road. Williamson County does not have responsibility for building or maintaining the private driveway. The Williamson County Highway Commission may, at its discretion, agree to accept this private driveway as a public road into the County Highway System if all property owners agree to (l) petition the Highway Commission for a public road and (2) build or pay for upgrading the private driveway to County specifications in effect at the time of the request.

_____, 20 _____
Date

_____ _____
County Engineer County Road Superintendent

By signing below, the property owner(s) of all lots within the bounds of this plat acknowledge awareness of the above Private Driveway Notation, and understands Williamson County does not have responsibility for building or maintaining the private driveway

_____ _____
Owner Signature(s) Tax Map & Parcel Number of Lot

_____ _____
Date Deed Book & Page

APPENDIX B-l0

CERTIFICATE FOR ADDRESSES

I do hereby certify that the addresses denoted on this final plat are those assigned by Department of Information Technology (IT).

_____	_____
Date	IT Department Title

CERTIFICATE OF APPROVAL OF
SUBDIVISION NAME AND STREET NAMES

I do hereby certify that the subdivision name and street names denoted on this final plat have been approved by the Williamson County Emergency Management Agency (EMA).

_____	_____	_____
Date	EMA Department or Authorized IT Representative	Title/Dept.

APPENDIX C-l

WATER LETTER FOR MAJOR SUBDIVISIONS

Chairman
Williamson County Regional Planning Commission
1320 W. Main St, #400
Franklin, TN 37064

RE: Water service for _____
(Subdivision, Location, Number Lots)

Dear Mr. Chairman:

Upon submission of the above-noted preliminary plan to us by the developer, we have investigated our ability to provide water for this development.

After consultation with our engineer, _____ , and considering the location and elevation of all the proposed residential building sites on the submitted plan, the _____ Utility District can and will furnish potable water at an adequate pressure and volume to serve this development.

By adequate service, it is understood that all proposed sites will have a minimum residual pressure of 20 p.s.i. at the water meter and of such volume that normal household demands will be met without significant pressure reduction and that at every fireplug there will be available a minimum volume of 250 gallons per minute with a residual pressure of 20 p.s.i. unless an unexpected emergency or an unforeseen circumstance arises, in which event the district does not guarantee any specific volume or pressure at any time or place.

Furthermore, our source of water is _____ which has a minimum daily capacity of _____ gallons per day. Our source is capable to and we will serve the required quantity of water for existing use, presently committee to taps and this project.

The water plans for the above mentioned development were reviewed and approved as reflected in the _____ minutes of the _____ Utility District.

Commissioner_____

Commissioner_____

Commissioner_____

APPENDIX C-2

WATER LETTER FOR MINOR SUBDIVISIONS

Chairman
Williamson County Regional Planning Commission
1320 W. Main St, #400
Franklin, TN 37064

RE: Water service for _____
(Subdivision, Location, Number Lots)

Dear Mr. Chairman:

Upon the submission of the above-noted preliminary plan to us by the developers we have investigated our ability to provide water for domestic service to this development.

After consultation with our engineer,_____, and considering the location, the _____can and will furnish potable water at an adequate pressure and volume to serve this development as required by the Tennessee Department of Public Health, except for unforeseen and uncontrollable interruptions.

Furthermore, our source of water is_____ which has a minimum daily capacity of _____ gallons per day and we are presently committed to _____gallons per day. Our source is capable to and will serve the required quantity of water, for existing use, presently committed taps and this project.

The water plans for the above mentioned development were reviewed and approved by the Commissioners of the District._____
(Date)

Commissioner_____

Commissioner_____

Commissioner_____

Appendix D

Letter of Credit Minimum Requirements
Williamson County Regional Planning Commission
IRREVOCABLE DOCUMENTARY/STANDBY LETTER OF CREDIT

The following components, at a minimum, shall be included in any letter of credit issued by any financial institution on behalf of an applicant to the Williamson County Regional Planning Commission.

1. Date of Issue
2. Name and Address of Issuing Bank
3. Name and Address of Advising Bank, if any
4. Credit Number
5. Name and Address of Accountee
6. Name and Address of the Beneificary – if the for Planning Commission the address is:
   Williamson County Planning Commission
   1320 West Main Street, Suite 400
   Franklin TN 37064
7. Auto-renewal (Required)
8. Maximum Amount
9. Name of the Development and specific section or phase, if any, for which the letter of credit is issued.
10. Description of the type of improvement the letter of credit is securing, for example: Roads, Drainage and Erosion Control, Landscaping; Off-Site Road Improvements; etc.
11. Certification statement:

    We hereby issued this documentary letter of credit in your (the beneficiary's) favor for which is available against your drafts at _____ accompanied by the following document: A certificate of default signed by the Secretary or other official of the Williamson County Regional Planning Commission certifying that the accountee has not complied with the terms of the agreement between the Planning Commission and the accountee and the amount of approximate damage to the local government, which amount shall be identical to the face amount of the accompanying draft.

12. Location/Address of branch of Bank where draft may be presented, which shall be Williamson County or via overnight delivery.

APPENDIX E

PERMIT BOND

WILLIAMSON COUNTY REGIONAL PLANNING COMMISSION

Building and Codes Department
1320 West Main Street, #400
Franklin, Tennessee 37064

PERMIT BOND NO._____

KNOW ALL MEN BY THESE PRESENTS, THAT WE, THE UNDERSIGNED,

_____

(Name must be exactly the same as state license if applicable)

Principal, of address _____ and surety provider, of address _____, a surety organized under the laws of the State of _____ and authorized to do business in the state of TENNESSEE and otherwise qualified in accordance with bond and surety requirements established in the Williamson County Subdivision Regulations, Section III, are held and firmly bound unto WILLIAMSON COUNTY REGIONAL PLANNING COMMISSION (COUNTY) as Obligee, for the benefit of the county, and for the benefit of the owner of property on which work is performed by the Principal pursuant to a permit (or permits) issued under this bond, in the full penal sum of ($) lawful money of the United States of America. We bind ourselves, our heirs, executors, administrators, successors and assigns; jointly and severally, firmly by these presents.

WHEREAS, the above bonded Principal has applied to the County to be permitted to build pursuant to Williamson County Zoning Ordinance and Subdivision Regulations.

NOW, THEREFORE, this obligation is to secure the following: that the Principal shall in all respects comply with and conform to all laws and ordinances of the County, relating to building, plumbing, electrical, gas/mechanical, housing, and zoning; that this obligation shall further bind the Principal and Surety for any damage to property of the County resulting from contracts of the Principal, such as but not limited to streets, roads, curbs, headwalls, gutters, water and sewer lines, sidewalks, alleys, traffic signs and signals, and for the costs of repairs incurred by property owners resulting from the failure of the Principal to comply with and conform to the above mentioned laws and ordinances of the County, and for on-lot landscaping required by the County.

The term of this bond is continuous, however, the Surety shall have the right to cancel this bond at any time by a written notice stating when the cancellation shall take effect, and served upon or sent by certified mail to the Director of the Department of Codes Administration of the County at least thirty (30) days prior to the effective date of the cancellation. Regardless of the number of years this bond may remain in force, the liability of the Surety shall not be cumulative, and the aggregate liability of the Surety for any and all claims, suits or action under this bond shall not exceed the

sum of ($).

No right of action shall accrue by reason of this Bond, to or for the use or benefit of anyone whatsoever other than the Obligee named herein.

_____ Principal

_____ Surety By _____

_____ Attorney-in-fact Address _____

_____ Agent's Phone Phone _____

Affix Seal and
Attach Agent's Power of Attorney Fax Number _____

BOND REQUIREMENTS

1-5 Houses	**$5,000 Each**
6 or More Houses	**$30,000**

Effective date of bond _____

APPENDIX F

SPECIFICATIONS FOR SUBDIVISION ROADWAY & DRAINAGE CONSTRUCTION INCIDENTAL TO LAND DEVELOPMENT IN WILLIAMSON COUNTY, TENNESSEE

ADOPTED BY:

WILLIAMSON COUNTY PLANNING COMMISSION

APRIL 6, 1978

AMENDED

JUNE 19, 1980
OCTOBER 25, 1984
DECEMBER 13, 1984
AUGUST 8, 1985

INDEX

I. GENERAL PROCEDURE..... A-39

II. ROADWAY CLASSIFICATION..... A-40

III. CONSTRUCTION PLAN REQUIREMENTS..... A-41

IV. SPECIFICATIONS FOR MATERIALS AND
CONSTRUCTION PROCEDURES..... A-45

V. ACCEPTANCE AND BONDING..... A-54

I. GENERAL PROCEDURE

A. AFTER APPROVAL OF THE PRELIMINARY PLAN

The Developer will be given one (1) copy of these regulations and the following steps will be followed for an expedient review and approval of the plans.

1. The Developer will submit to the County Engineer the detailed construction plans for the section or sub-section of work to be accomplished.

2. The plans will be submitted with all pertinent supportive data and expedite a quick review by the County Engineer and County Road Superintendent. Such supportive data will include but not be limited to drainage work sheets, drainage computations, etc.

3. The data to be included and shown on the plans is noted in Section III.

4. Upon review and approval of the road and drainage plans by the County Engineer, four (4) sets will be stamped, signed, dated and issued.

5. The distribution of the stamped plans will be this:
   County Engineer- 1 set
   County Road Superintendent- 1 set
   Developer- 2 sets

6. No final plats will be heard for approval by the Planning Commission until an approved set of road and drainage plans have been obtained by the developer for the section being readied for recording.

7. Bonding- Initial bond for performance period will be two (2) years from date of bond issuance. Extension will be at the discretion of the Planning Commission and only for extenuating circumstances beyond the control of the Developer.

8. CW Mix shall be in place for a minimum of one year before going on a Maintenance Bond.

9. If developer completes improvements before Final Plat approval, Maintenance Bond period shall be a minimum of two (2) years, reviewed annually.

II. ROAD CLASSIFICATION - BY USE

A. CLASSFICATION

For the purpose of these regulations, roads shall be classified as follows:

1. RESIDENTIAL

Typical road in a residential subdivision designed to serve light passenger car traffic.

2. COLLECTOR

Located in a residential or an industrial and commercial subdivision. Serves as an artery which connects minor subdivision roads with a thoroughfare, or another collector road.

3. COMMERCIAL AND INDUSTRIAL ROAD

Road which serves a commercial and industrial development. This class of road is designed to carry a predominance of truck traffic.

B. TYPICAL SECTIONS

Supplementing these regulations are the attached typical roadway sections. It is noted that for each roadway classification, an optional cross-section with curbs is shown in addition to the conventional cross-section with shoulders and swale-type drainage.

Outlined are the minimum dimensions for each class and type of roadway cross-section.

III. ROADWAY CONSTRUCTION PLAN REQUIREMENTS FOR NEW SUBDIVISION DEVELOPMENTS IN WILLIAMSON COUNTY, TENNESSEE

The construction plans shall be submitted to the Williamson County Engineer as a bound set and shall consist of a Title Sheet, Detail Sheets, a Traffic Plan, a Grading and Drainage Plan, Plan and Profile Sheets, and any other information required for proper review of the proposed construction.

A. TITLE AND COVER SHEET SHALL INCLUDE:

1. Name of Development
2. Name and Address of Developer/s
3. Name and Address of Engineer of Surveyor
4. Professional Engineer's or Surveyor's Stamp and Signature
5. Location Map

B. DETAIL SHEETS SHALL INCLUDE:

1. Headwalls
2. Bridges
3. Typical Road Sections
4. Typical Ditch Sections
5. Cross Drain Details
6. Any other structures or constructions requirements of special detail.

C. TRAFFIC PLAN SHALL INCLUDE:

1. A layout of the road sat a scale no less than 1" = 100'.
2. The width of all proposed and existing rights-of-way and pavements.
3. The proposed location of all traffic signs, warning signs, and regulation signs required.

D. GRADING AND DRAINAGE PLANS TO INCLUDE:

1. A complete plan of the proposed development of scale no less than one inch (1") equals one hundred (100) feet. This plan is to include complete contours of interval no greater than five (5) feet. U.S.G.S. 1929 Datum is to be used exclusively. A north arrow will be shown on the plan. The source and date of the contour should be noted.

2. All proposed roads and lot patterns, with roadway stations shown on the road plans.

3. A detailed typical section indicating type of road construction proposed.

4. All drainage structures, including inlets, catch basins, junction boxes, culverts, crossdrains, headwalls, and drainage ditches, shall be shown in size, type, and material. Details of the structures shall be included with these plans. Ornamental entrances and structures will be examined on an individual basis.

5. All proposed drainage ditches, channel changes, or improvements shall be shown with typical section, slope, exact location, and length of change or improvements indicated.

6. Where ditch section is used, the stabilization of roadside ditches will be as required by Section IV and shall be shown with length, grade location and type stabilization required.

7. All off road fill areas will be indicated as such, with the limits and elevation indicated on each lot effected.

8. At least one permanent Bench Mark location will be indicated, within the development, with the proper elevation and description of same. (U.S.G.S. 1929 Datum to be used exclusively.)

9. Design of the storm drainage system shall be based on the following requirements:

a. Runoff shall be calculated in accordance with projected land use upstream and downstream of drainage ways. Such projected land use will be obtained from the Williamson County Planning Commission.

b. The rational method shall be used in all drainage calculations.

c. In the computation of storm runoff, the coefficient of runoff should be noted on the drainage plan. The minimum coefficient of runoff will be 0.6.

d. The rainfall intensity used will be that which will produce a fifty (50) year frequency return discharge, and investigated for a one hundred (100) year discharge. Normally, for small drainage areas this will be between four (4) and six (6) inches per hour. For rainfall intensities less than four (4) inches per hour supportive time of concentration data will be submitted.

10. Drainage Easements and Ditches- Easements shall be dedicated for all drainage ditches. The entirety of each ditch including the side slopes shall be within the easement. The ditch shall be fully stabilized in accordance with these regulations, Section IV-B; so that its location and geometry will be permanent. Each easement shall be dedicated on the final plat of record and shall be dimensioned in such a fashion that it can be reproduced on the ground with certainty. Any proposed ditch shall be constructed within the dedicated easement and any existing ditch shall be located in the field and an easement of sufficient width dedicated. The width and location of all easements shall meet the approval of the Williamson County Engineer.

E. PLAN AND PROFILE SHEETS

The plan-profile sheets submitted with the grading and drainage plans shall include the following:

1. Detail plans for streets shall be plotted on Federal Aid plan and profile sheets to a scale of not less than 1” = l00’ horizontal, and not less than 1” = 10" vertical. Mixing of scales within a set of plans is discouraged.

2. The street plan section shall include the street plotted to the proper scale with stationing shown; the stationing should match that shown on the profile section as nearly as possible.

3. Profile section shall be plotted to the same scale as heretofore mentioned, and shall include the proposed centerline finish grade profile, in addition to the existing centerline profile.

4. Where curb type development is to be used, existing ground profiles at twenty-five (25) feet left and right of centerline will be shown as to station and elevation.

5. All vertical control points on or pertaining to the proposed centerline profile such as P.V.C., P.V.I., and P.V.T. points, all low points, and street intersections, shall be shown as to station and elevation.

6. All percent grades and vertical curve data, both balanced and unbalanced, shall be shown.

7. All drainage structures incidental to the street construction shall be shown giving the stationing, skew and type. A detail of the type structures shall be included with these plans.

8. Invert and top grade elevations on all catch basins and inlets shall be shown in addition to flow line elevations, stations, and percent grades on all crossdrains and pipe between inlets and catch basins.

9. Drainage arrows shall be shown indicating the intended direction of flow throughout the plan including all off road localized drainage.

10. Where ditch section is used, the stabilization required for the roadside ditches shall be shown with both the length and type stabilization required.

11. Where special structures, such as box culverts, bridges, or junction boxes are proposed in the development, detailed plans showing all dimensions, reinforcement, spacing, sections, elevations, and other pertinent information necessary to complete said detailed plans shall be submitted to the Williamson County Engineer as part of the bound set of construction plans.

F. <u>REVIEW</u>

Omission of any of the heretofore mentioned requirements for detailed plans shall deem these plans as being incomplete and shall be returned to the Developer, or his Engineer, for completion before review.

G. REVISION OF PLANS

Should, prior to, or during construction, necessary changes be anticipated that would constitute a revision of the plans already approved by the Williamson County Engineer, said plans shall be reviewed with said changed shown, and resubmitted, in triplicate, along with a letter stating why such changed are believed necessary. The Williamson County Engineer shall have the right to re-review the entire set of plans in the light of these requested changes.

H. CONSTRUCTION

The County Engineer will be notified by the developer two (2) days prior to the date that work on the proposed development is to start.

IV. SPECIFICATIONS FOR MATERIALS AND CONSTRUCTION PROCEDURES

The general procedure for building the subdivision roads required in these regulations shall begin with the clearing of the rights-of-way. After the placement of all utilities and drainage structures and the approval of the subgrade, and the pug mill mix base shall be placed in maximum lifts of four (4) inches. The stone base shall be brought to grade with the proper crown before compaction tests are taken. The dimensions and compaction requirements of the typical section are minimums and shall be met or exceeded. After the base has been approved by the Williamson County Engineer the procedure shall be as follows depending on the typical section approved for consideration.

Any reference to the Tennessee Highway Specifications shall refer to the TENNESSEE DEPARTMENT OF TRANSPORTATION BUREAU OF HIGHWAYS NASHVILLE STANDARD SPECIFICATION FOR ROAD AND BRIDGE CONSTRUCTION, March 2, 1981 edition and any further amendments or additions. The State of Tennessee Department of Transportation Bureau of Planning and Development Division of Design and Structures STANDARD ROADWAY AND STRUCTURE DRAWINGS with updates or revisions is hereby adopted as part of these regulations in addition to the standards specified herein, with these standards to be used as directed or approved by the Williamson County Engineer or his authorized representative.

> Ditch Section: The stone base shall be primed for the width of the pavement. All loose stone and any debris shall be swept from the surface before the CW Mix is placed. After the placement of the CW Mix the shoulders shall be dressed and sealed with a double bituminous surface treatment at the instruction of the County Engineer or his authorized representative. At 80% completion of the development or the last paving season before the end of the maintenance period, the E Mix surface shall be applied. The shoulders shall then be dressed with oil and chips; until there is a smooth transition from the pavement surface to the shoulders.
>
> Curb Section: The stone base shall be primed in its entirety. The extruded curbs hall be laid directly on the primed surface and allowed to cure. Earth shall be placed behind all curbs so that within four (4) feet of the curb the ground slopes toward the roadway shall be swept from the primed surface and the CW Mix shall be laid from curb to curb. At the completion of 80% of the development or the last paving season before the expiration of the maintenance bond, the E Mix surface shall be applied.

A. DRAINAGE

The overall drainage of the road or network of roads will be coordinated with, and approved by, the Williamson County Engineer. Sizes and lengths of cross drains and driveway culverts, where required, shall be determined to be consistent with the following minimum requirements: For driveway culverts, a minimum diameter of eighteen (18) inches, and a minimum length of twenty (20) feet; for cross drains, a minimum diameter of eighteen (18) inches.

Reinforced concrete pipe shall conform to the minimum standards for Class III reinforced pipe; A.S.T.M. C-76 corrugated metal pipes shall meet the following minimum gage requirements:

PIPE SIZE

For Cross Drains	18" 24" 30" - 14 gage	36" 42" 48" 54" - 12 gage	60" 66" 72" 10 gage
For Driveway	15”18" 24" 30" - 14 gage	36" 42" 48" - 12 gage	54" 60" 66" 72" 10 gage

For pipes smaller than 48 inches in diameter, a minimum cover of one foot is required. A minimum cover of two feet is required for pipes 48 inches in diameter and larger.

Roadside ditches shall be built to a grade that will provide good drainage, and in no case shall the slope of the ditch be less than 0.5 percent (a fall of 0.5 foot in 100 feet).

Cross drains and driveway pipes shall be built on straight line and grade, and shall be laid on a firm base, but not on bedrock. Pipes shall be laid with the spigot end pointing in the direction of the flow and with the ends fitted and matched to provide tight joints and a smooth uniform invert. Headwall will be constructed at both ends of the cross drain and driveway pipes in accordance with drawing number 6,7, or 8 of these regulations.

All drainage ditches shall be stabilized to prevent erosion as indicated in Section IV, B of these regulations.

All storm sewer pipe connections shall be field inspected by a representative of a Geotechnical Engineer. This includes all areas associated with the storm drainage system and not limited to the dedicated rights of way.

B. STABILIZATION OF DITCHES

All open ditches shall be stabilized in accordance with the following requirements:

Size of Nearest Culvert

Upstream	Seed	Sod	Concrete Lined
18”	Grades Less than 3.0%	Grades 3-12%	Grades exceeding 12%
21”, 24”	Grades Less than 1.5%	Grades 1.5%-7.0%	Grades exceeding 7.0%
30”, 36”	Grades Less than 1.0%	Grades 1.0%-4.0%	Grades exceeding 4.0%
42”, 72”	----------	Grades or less	Grades exceeding 2.5%

Note: Where culverts empty into ditches with grades exceeding the grade of the culverts, the minimum requirements set forth above may not be satisfactory. In this case, the treatment shall be specified by the Williamson County Engineer or his representative.

1. CONCRETE-LINING- Ditches that require lining with concrete (see dwg. #19) shall be lined to a height above the bottom of the ditch no less than one-half (1/2) the diameter of the nearest culvert (upstream). However, in no case shall the lining extend less than one foot above the bottom of the ditch.

Lined ditches shall be constructed of Class "B" concrete (3000 p.s.i. 28 day strength). The lining shall be firmly bedded and securely attached to adjacent drainage structures. Concrete mixture used will be such as to attain a smooth, monolithic, and reasonably water tight lining, and be placed upon a firm subgrade which will be void of all objectionable matter (grass, roots, etc.).

The finished lined ditch shall conform to designated lines and grades and shall add rather than detract from the appearance of the roadway.

2. SODDING- Ditches that require sodding shall be sodded to a height above the bottom of the ditch not less than one-half (1/2) the diameter of the nearest culvert (upstream). However, in no case shall the sod extend less than one foot above the bottom of the ditch.

The sod shall consist of a live, dense, well-rooted growth of permanent grasses, free from Johnson grass, Nut grass, and other objectionable grasses, and suitable for the soil in which it is to be placed. The sod shall be eight (8) inches wide, not less than eighteen (18) inches long, and have at least three (3) inches in thickness of soil in its roots. The sod shall be placed only when the soil is moist and favorable to growth. No sodding shall be done between November 1st and April 1st unless otherwise directed by the Williamson County Engineer. The area to be sodded shall be constructed to the designated lines and grade, and the surface loosened to a depth of not less than 3 inches with a rake or other device. If necessary, it shall be sprinkled until saturated at least one inch in depth and kept moist until the sod is placed thereon. It will not be required but it is recommended that immediately before placing the sod, commercial fertilizer (6-12-12) shall be uniformly applied at the rate of 18 pounds per 1,000 square feet. However, the Williamson County Engineer will hold the Developer responsible for an acceptable stand of grass in the ditches for stabilization.

The sod shall be placed on the prepared surface with the edges in close contact and shall be pounded into place with wooden tamps, or other satisfactory equipment. On steep slopes, pinning or pegging will be required to hold the sod in place.

3. SEEDING- The area to be seeded shall be constructed to the proper line and grade, and the surface loosened to a depth of not less than 3 inches with a rake or other device. After the top 3 inches of soil has been rendered loose, fraible, and reasonably free from large clods, rocks, large roots, or other undesirable matter, lime and fertilizer shall be carefully worked into the soil in the following amounts:

Agricultural Limestone (85% Calcium Carbonate Equivalent, 85% through a l0-mesh screen; 50% through a 40-mesh screen; 3 tons per acre, 140 pounds per 1,000-square feet.)

Commercial Fertilizer (6-12-12) - 1,300 pounds per acre (30 pounds per 1,000 square feet.)

Seeds shall be uniformly sown on the prepared seedbed in accordance with the following schedule, and raked, drelled or harrowed approximately one-quarter inch into the soil.

a. Seeding Mixtures*

(1) August 1 - October 15 (best time for sending).

	Rural Areas		Urban Areas	
	% Total Lbs. /A		% Total Lbs. /A	
Tall Fescue	70	80	70	80
Unhulled Bermuda Grass **	20		20	
Creeping Red Fescue	5		5	
White Dutch Clover	5		5	

(2) October 15 - May 1

Tall Fescue	40	120	80	
Unhulled unscarified serices lespedeza (March 1- May 1)	50			
Creeping Red Fescue	5		5	
White Dutch Clover	5		5	

*Recommended jointly by Soil Conservation Service, Tennessee Agricultural Extension Service and Tennessee Agricultural Experiment Station.

**Where Bermuda Grass is objectionable, omit it and increase tall fescue to ninety (90%) percent.

This area shall be mulched with one and one-half (1 ½) to two (2) tons per acre of small grain straw of fescue, orchard grass or native grass hay of less than 20% moisture, so that 25 – 30 % of the ground is visible.

The mulched area shall be watered if necessary to maintain a reasonably moist condition until germination and continued growth is insured.

C. HEADWALL REQUIREMENTS

All headwalls for cross drains and driveway pipe shall be poured in place concrete (Class “A”, 4000 p.s.i. 28 days).

Concrete headwalls shall be not less than 12” inches thick for pipes 18 inches through 30 inches, and shall be adequately reinforced for pipe larger than 30”.

Length of wingwalls and height of headwalls for all pipes shall be determined by the amount of fill, the size of pipe, and the general conditions surrounding the pipe. (See drawing no.’s 6, 7, and 8.)

If decorative or ornamental headwalls are desired, approval of such structures shall be given by the Williamson County Engineer upon review and such headwalls should be shown in detail on the plan.

Headwalls for driveway pipe on each individual lot will be inspected and approved by the Williamson County Engineer or his authorized representative prior to or concurrently with the County Building Inspector's inspection for issuance of an occupancy permit.

D. CURBS

Machine-laid (extruded) curbs are permitted which meet the following specifications:

1. CONCRETE- Concrete Strength (20 day) 3500 PSI

Maximum Slump 1-1/2 inch

Gradation of Aggregate (river gravel)

Sieve Size	Percent Passing
4	96-100
8	80-100
16	55-80
30	45-65
50	10-25
100	2-7

Concrete shall be cured by covering with burlap, cotton or jute mats or sacking, which is kept moist for a period of at least 5 days, or by the application of a liquid membrane to prevent evaporation losses. In the latter case, the material and method of application shall be approved by the County Engineer.

2. ALIGNMENT - Curbs shall vary from the specified alignment (on the plans) not more than 0.10 foot.

3. TYPICAL SECTION - Unless otherwise directed by the County Engineer, curbs shall conform to the typical section shown on drawing number five (5). Curbs shall be continuous across driveways, and shall be recessed to provide entrance way of four (4) inch thickness.

E. CLEARING AND GRUBBING

Before grading is started, the entire street right-of-way including side slopes, shall be cleared of all objectionable matter, such as trees, stumps, roots, weeds, heavy vegetation, debris, etc.: disposal of this material will be in accordance with current County, State, or Federal regulations.

F. PREPARATION OF SUBGRADE

1. Fill material shall be evenly and uniformly spread in layers not to exceed eight (8) inches in thickness over the entire width and thickness of the embankment section. Each layer shall be thoroughly rolled with an approved sheeps foot or pneumatic tired roller. If in the opinion of the Williamson County Engineer, the soil is too dry, water will be added by a pressure distributor or other approved method. Soils which are too wet will be allowed to dry before compaction and further filling is attempted.

2. Fills shall be compacted to ninety-five (95%) percent of the maximum dry density according to standard proctor density (ASTM-D-698-70) material used. Density tests shall be conducted by a local testing laboratory, approved by the County and licensed by the State of Tennessee, and shall be at the Expense of the developer. Reports shall be submitted directly to the County Engineer. A minimum of one density test per lift for each five-hundred (500) feet of roadway will be required.

3. If rock is encountered it shall be removed to a depth of at least twelve (12) inches below the subgrade of the road, and suitable backfill material will be used to build the cut section up to proposed grade.

4. The finished subgrade shall provide for super elevation and crown of the roadway.

G. BASE AND PAVING

1. Typical Section

The type base and surface to be used shall be shown on the approved plans and shall not vary from the typical roadway sections of these specifications. The placement of all base and surface materials shall be at the expense of the Developer. Test of the subgrade required under Section IV, F, of these specifications, by a private testing laboratory, shall be submitted to the County Engineer prior to placement of the base course.

2. Crushed Stone Pug Mill Mix to be Used in Roadway Base Construction

a. After the subgrade has been inspected and approved, by the Williamson County Engineer or his authorized representative, a base shall be constructed of the width and thickness indicated in the roadway typical sections.

b. Description: Crushed stone base (Pug Mill Mix) shall consist of a base course constructed with an approved mixture of crushed stone, water, and calcium chloride, bonded by rolling and/or vibratory compaction; maintained under traffic; and in conformity with the lines, grades, and cross sections as indicated on the plans,

c. Scope: These specifications cover the quality, gradation, and mixing of materials composing Pug Mill Mix to be used in roadway base courses.

d. Materials: All materials used in this construction, in addition to the general requirements of these specifications, unless otherwise stipulated, shall conform to the technical specifications as set forth below.

Aggregates for Mineral Aggregate Base and Surface Courses shall be crushed stone, crushed slag, crushed or uncrushed gravel, or crushed or uncrushed chert, together with such materials manufactured sand or other fine materials naturally contained, or added thereto as needed to conform with these specifications.

1) The aggregate for mineral aggregate base and surface courses shall consist of hard durable particles or fragments of stone, slag, gravel, or chert, and other finely divided mineral matter. Individual materials shall meet the requirements specified below:

2) Crushed stone shall be free of silt and clay. The coarse aggregate portion of the stone shall have a percentage of wear of not more than fifty, and when subjected to five alternations of the sodium sulfate soundness test, the weighted percentage of loss shall not exceed fifteen.

3) Crushed slag shall be free of silt and clay and shall meet the quality requirements of crushed stone. It shall be reasonably uniform in density and shall have a dryrodded weight of at least seventy pounds per cubic foot.

4) Crushed gravel and crushed chert shall be screened and all oversize material shall be crushed and fed uniformly back over the screen. The coarse aggregate portion (retained on the No. 4 sieve) shall have a percentage of wear of not more than thirty (30). The portion of the material passing the No. forty (40) sieve shall be non-plastic, or shall have a liquid limit of not more than twenty-five and a plasticity index of not more than six. If fine aggregate, coarse aggregate or binder, in addition to that present in the base material, is necessary in order to meet the gradation requirements, or for satisfactory bonding of the material, it shall be uniformly blended with the base course material at the mixing plant by a mechanical feeder to maintain a uniform flow on the belt to the mixer. Blending of materials on the stockpiles or in the pits by bulldozer, clamshell, dragline or similar equipment will not be permitted.

The composite gradation of this aggregate shall be as follows:

Total Per Cent by Weight, Passing Sieves

Grading	1 1/2”	1”	3/4”	3/8”	No.4	No.16	No.10
D	100	85-100	60-95	50-80	40-65	20-40	9-18

5) Calcium Chloride will be incorporated in the crushed stone aggregate base material mixture at a rate of approximately 0.06 bag of Type two (2) (concentrated) per ton of aggregate (based upon a bag weight of 80 pounds this will be

approximately 5 pounds of calcium chloride per to of aggregate). Calcium chloride used shall conform to the requirements of AASHOM-114.

6) Water shall be incorporated in the crushed stone aggregate base material mixture during the mixing operation in the amount necessary to provide a moisture content satisfactory for compacting. Water used in the mixing process shall be reasonably clean and free of oil, salt, acid, alkali, sugar, vegetable matter, or other substances injurious to the finished product. Water will be tested in accordance with AASHO T 26. Water known to be of potable quality may be used without test. Where the source of water is relatively shallow, the intake shall be so enclosed as to exclude silt, mud, grass, or other foreign materials.

The mixture shall be deposited uniformly on the subgrade from spreader boxes in a minimum of two layers. After each layer is deposited, it shall be smoothed to grade and cross-section with a power grader and rolled.

The compacted dry weight per cubic foot of material in each layer shall not be less than ninety-eight (98%) percent of that determined as an average of maximum compaction for the material in use. The determination of the average maximum compacted dry weight pounds per cubic foot shall be calculated by multiplying the Specific Gravity of the mineral aggregate by fifty three (53). This compacted density requirement shall apply regardless of the type of compaction used. Testing shall be conducted by a State licensed testing laboratory, and test results shall be submitted to the County Engineer for approval. The crown, width, depth, and grade of the base stone shall be approved by the County Engineer prior to testing for compaction.

3. PAVING SPECIFICATIONS AND PROCEDURES

The base, prepared as outlined herein, shall be sprinkled lightly with water to settle any loose dust. A bituminous prime coat shall then he applied as specified below. After the crushed stone base and prime coat has been inspected by the County Engineer or his authorized representative, the base shall be primed and tacked (as necessary) and the asphaltic concrete surface- CW mix shall be placed as indicated on the roadway typical section with the specifications as outlined below. After the CW mix has been inspected and approved by the Williamson County Engineer or his authorized representative, a tack coat with specifications as stated below shall be applied and asphaltic concrete paving, E Mix will be installed as indicated in the roadway typical sections with the Specifications outlined below.

The specifications for material and construction procedures for asphaltic concrete paving, grading CW Mix shall be as specified in Section 307, as subsections and special provisions pertaining thereto of the TENNESSEE DEPARTMENT OF TRANSPORTATION BUREAU OF HIGHWAYS NASHVILLE STANDARD SPECIFICATIONS FOR ROAD AND BRIDGE CONSTRUCTION March 1, 1981 edition and any further amendments or additions (TDOT specs.). The specification for material and construction procedures for Prime Coat shall be as specified in Section 402 and all subsections and special provisions

pertaining thereto of TDOT specs. The specification for material and construction procedures for E Mix shall be as specified in Section 411, all subsections and special provisions pertaining thereto of the TDOT SPECS. The specifications for the Tack Coat between the CW Mix and the E Mix shall be as specified in Section 403 all subsection and special provisions pertaining thereto of the TDOT specs.

H. SIGNS

The developer shall furnish and install all roadway signs. These shall include signs for warning, regulation, the direction of traffic and the proper labeling of streets.

1. Street name signs shall be placed at every intersection. The name plate shall be 6"x 24" or 6"x 30" as required by the length of the street name. The lettering shall be 4 inch capitols, reflective silver on a green background engineering grade reflective sheeting. The name plate shall be 0.80 – 0.100 aluminum. The name plate or plates as necessary shall be placed by use of a properly fitting adapter on a 2½ inch round galvanized post or a two (2) pound per foot painted U-Channel railroad steel post.

2. Traffic warning and regulation signs shall be placed as required at all appropriate intersections or on the roadside in accordance with the Traffic Plan which shall be submitted to the Williamson County Engineer to be approved with the construction plans. The size and placement of all traffic signs shall conform to the requirements of UNIFORM TRAFFIC CONTROL DEVICES FOR STREETS AND HIGHWAYS published by The U.S. Department of Transportation, Federal Highway Administration.

I. TESTING OF ROADWAY INFRASTRUCTURE

Testing shall be conducted by a State licensed testing laboratory, approved by Williamson County, and shall be at the expense of the developer. Weekly reports showing projected site activities, including all test data, shall be provided to the County Engineer, throughout the duration of roadway construction. A detailed letter from a Geotechnical Engineer attesting that all roadway improvements have been constructed in accordance with the specifications contained within Appendix F of the Williamson County Subdivision Regulations will be required prior to release of the Performance Bond. The letter shall contain the seal of the Engineer, and be in report form, including all weekly project activity reports and the associated testing results.

J. TESTING AND INSPECTION OF BACKFILL AT UTILITY AND STORM SEWER TRENCHES

Testing shall be conducted by a licensed laboratory, approved by the County Engineer, and shall be at the expense of the developer. Test data shall be included with weekly reports, and included with the final report provided by a licensed Geotechnical Engineer prior to release of the Performance Bond.

V. ACCEPTANCE AND BONDING

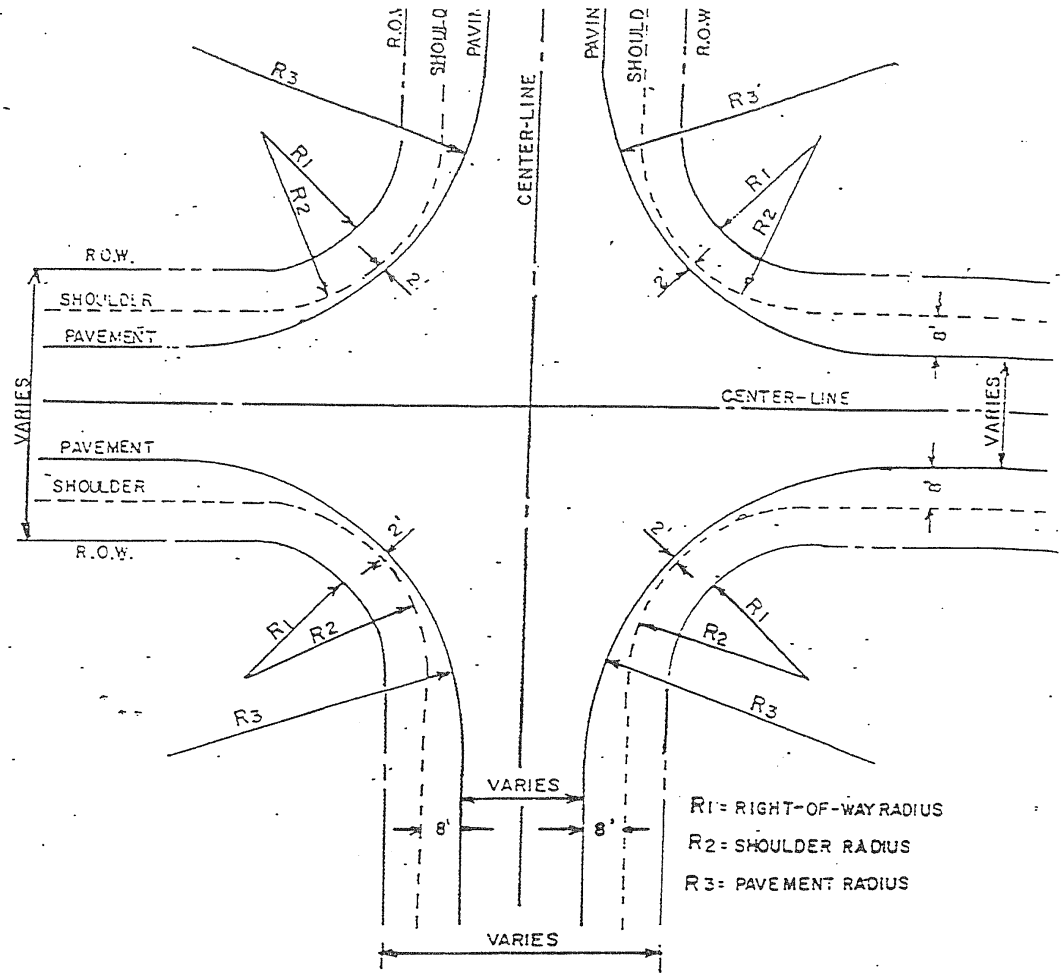

TYPE OF INTERSECTION	R1	R2	R3	R.O.W.
RESIDENTIAL	25' MIN.	30'	54.49	50'
COMMERCIAL OR INDUSTRIAL	25' MIN.	38'	58.49	60'
COMBINATION RESIDENTIAL & COLLECTOR OR COMMERCIAL	25'	38'	58.49	50' & 60'

NOTE: FOR A COMBINATION RESIDENTIAL & COLLECTOR STREET INTERSECTION THE RADIUS POINT FOR R.O.W AND RADIUS POINT FOR EDGE OF SHOULDER WILL NOT BE THE SAME. DISTANCE BETWEEN THE EDGE OF PAVEMENT & EDGE OF SHOULDER AT THE CRITICAL POINT SHALL BE 2 FEET.

INTERSECTION DETAIL CONVENTIONAL SECTION
DRAWING NO. 2 SCALE: NONE DATE: 6-15-77
WILLIAMSON COUNTY PLANNING COMMISSION

23

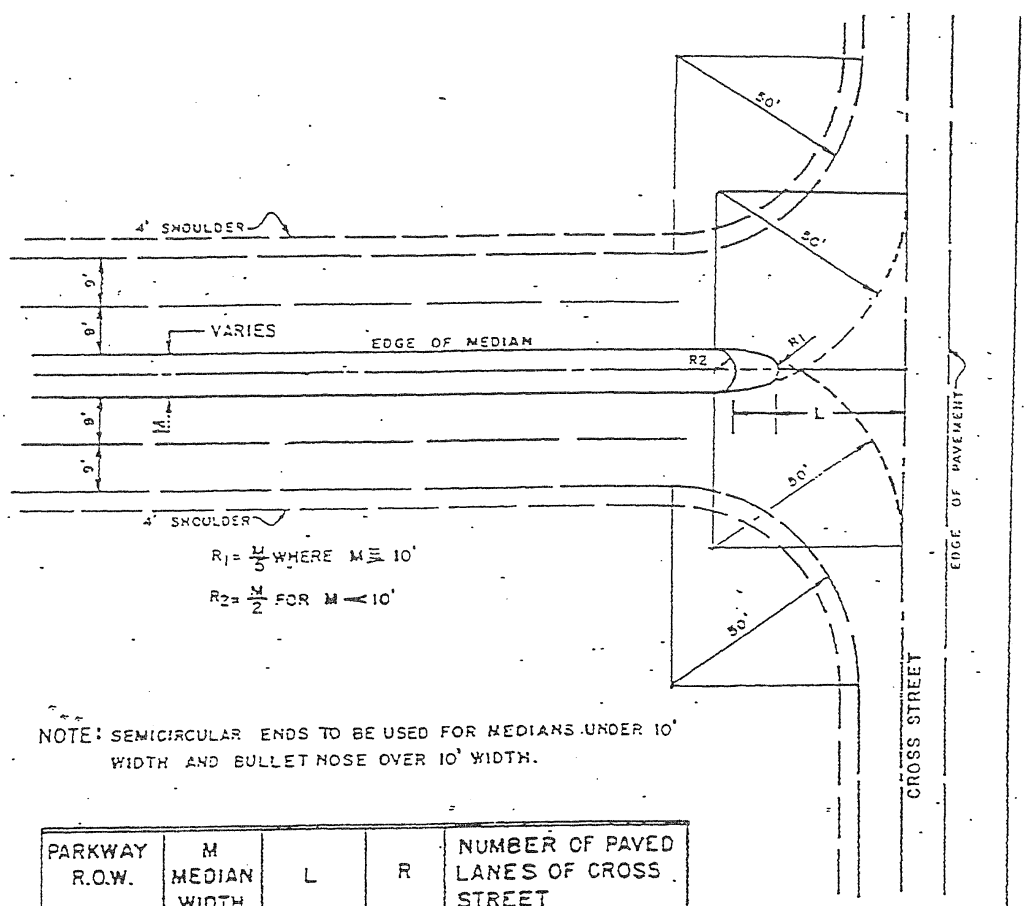

$R_1 = \frac{M}{5}$ WHERE $M \geq 10'$

$R_2 = \frac{M}{2}$ FOR $M < 10'$

NOTE: SEMICIRCULAR ENDS TO BE USED FOR MEDIANS UNDER 10' WIDTH AND BULLET NOSE OVER 10' WIDTH.

PARKWAY R.O.W.	M MEDIAN WIDTH	L	R	NUMBER OF PAVED LANES OF CROSS STREET
60'	2'	42.31		2
		54.31		4
		66.31		6
70'	12'	29.45	2.4	2
		41.45	2.4	4
		53.45	2.4	6
80'	22'	22.00	4.4	2
		34.00	4.4	4
		46.00	4.4	6

NOTE: WHERE THE CROSS STREET IS A DIVIDED HIGHWAY THE LENGTH OF OPENING SHOULD BE AT LEAST EQUAL TO ONE-HALF THE TOTAL WIDTH OF THE CROSS STREET PAVEMENT PLUS MEDIAN, PLUS SHOULDERS AND IN NO CASE LESS THAN 20 FEET.

PARKWAY ENTRANCE
CONVENTIONAL SECTION

DRAWING NO. 3
SCALE: NONE DATE: 6-15-77

WILLIAMSON COUNTY
PLANNING COMMISSION

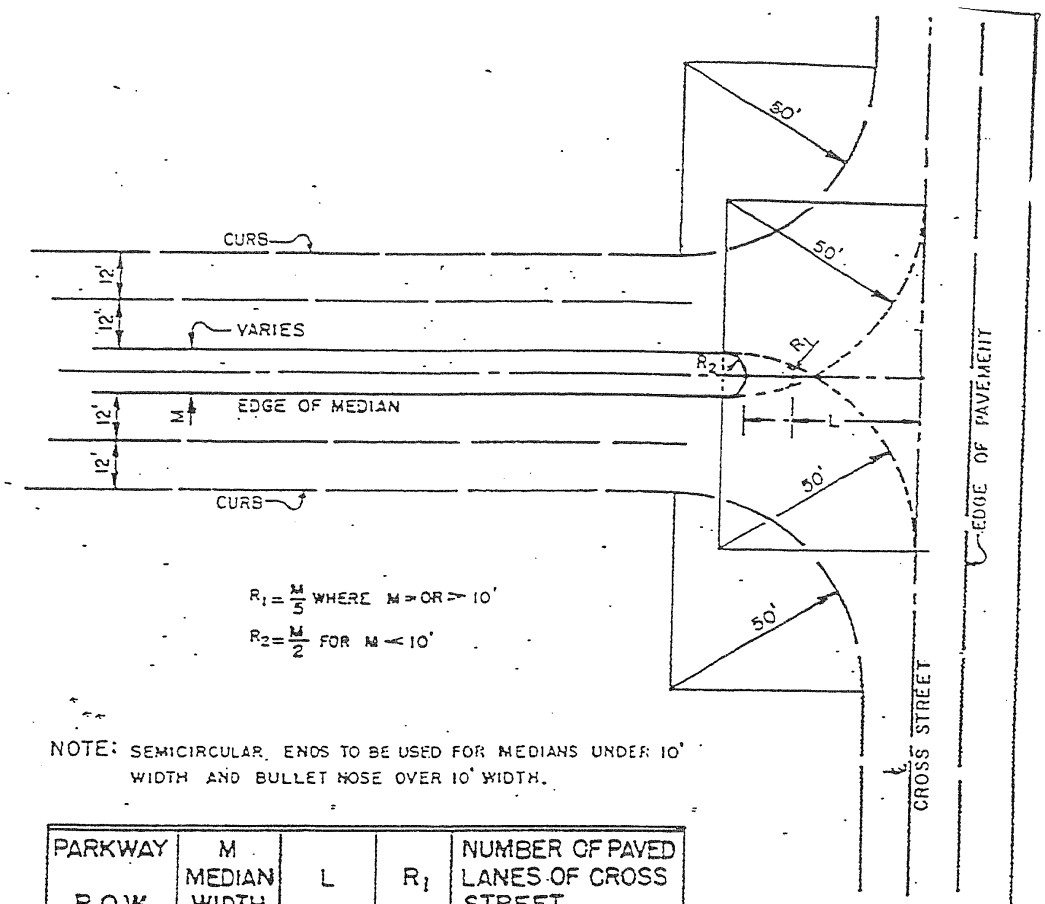

$R_1 = \frac{M}{5}$ WHERE M ≥ OR ≥ 10'

$R_2 = \frac{M}{2}$ FOR M < 10'

NOTE: SEMICIRCULAR ENDS TO BE USED FOR MEDIANS UNDER 10' WIDTH AND BULLET NOSE OVER 10' WIDTH.

PARKWAY R.O.W.	M MEDIAN WIDTH	L	R_1	NUMBER OF PAVED LANES OF CROSS STREET
60'	4'	40.00		2
		52.00		4
		64.00		6
70'	14'	33.35	2.8	2
		45.35	2.8	4
		57.35	2.8	6
80'	24'	30.40	4.8	2
		42.40	4.8	4
		54.40	4.8	6

NOTE: WHERE THE CROSS STREET IS A DIVIDED HIGHWAY THE LENGTH OF OPENING SHOULD BE AT LEAST EQUAL TO ONE-HALF THE TOTAL WIDTH OF THE CROSS STREET PAVEMENT PLUS MEDIAN, PLUS SHOULDERS AND IN NO CASE LESS THAN 20 FEET.

PARKWAY ENTRANCE CURB SECTION

DRAWING NO. 4

SCALE: NONE DATE: 6-15-77

WILLIAMSON COUNTY PLANNING COMMISSION

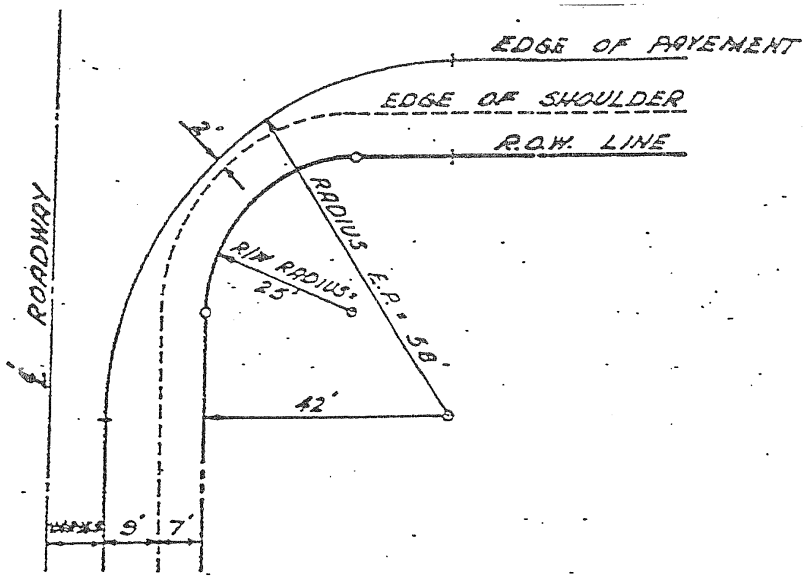

TYPICAL INTERSECTION DETAIL
SCALE : NONE

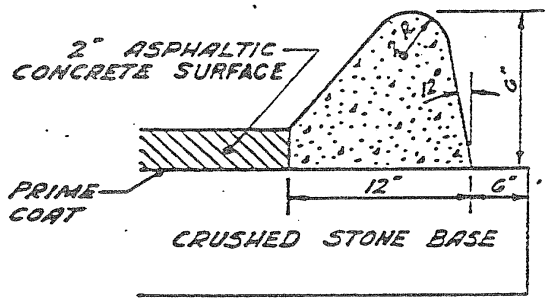

TYPICAL CURB DETAIL
SCALE : NONE

TYPICAL INTERSECTION AND CURB DETAILS
DRAWING NO. 5 SCALE: NONE DATE: 6-15-77
WILLIAMSON COUNTY PLANNING COMMISSION

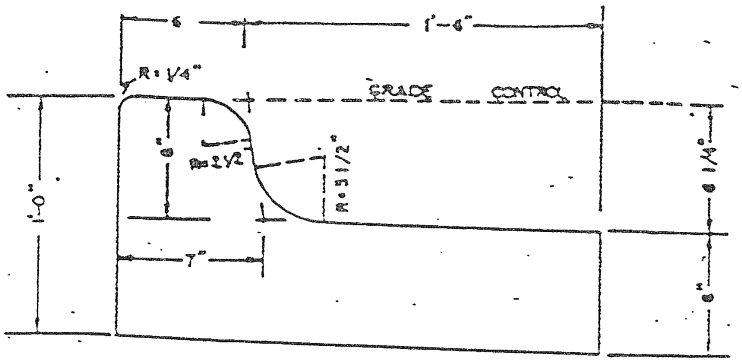

SPILL

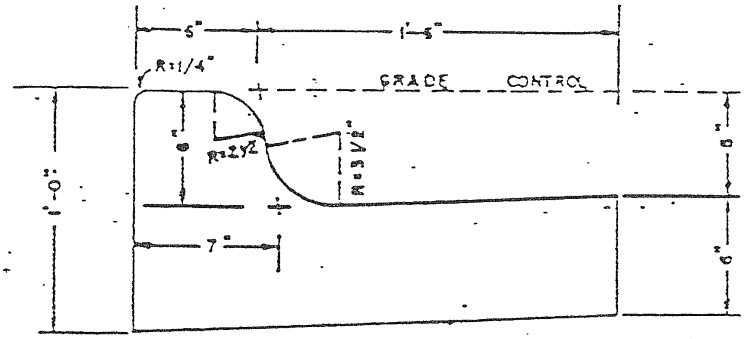

CATCH

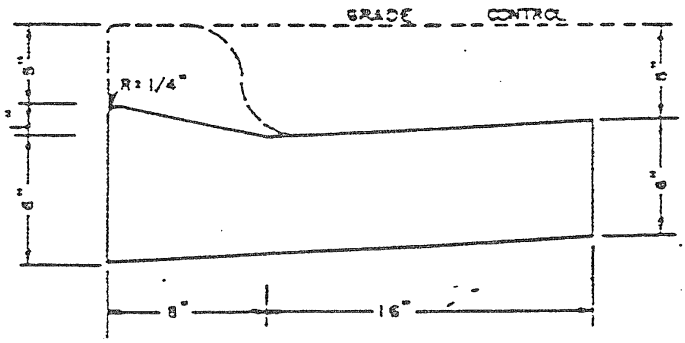

LAY DOWN CURB

URBAN & SUBURBAN DEVELOPMENTS

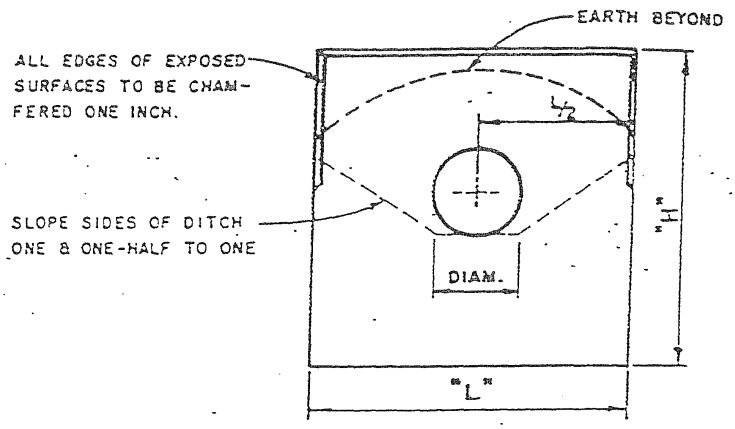

ELEVATION

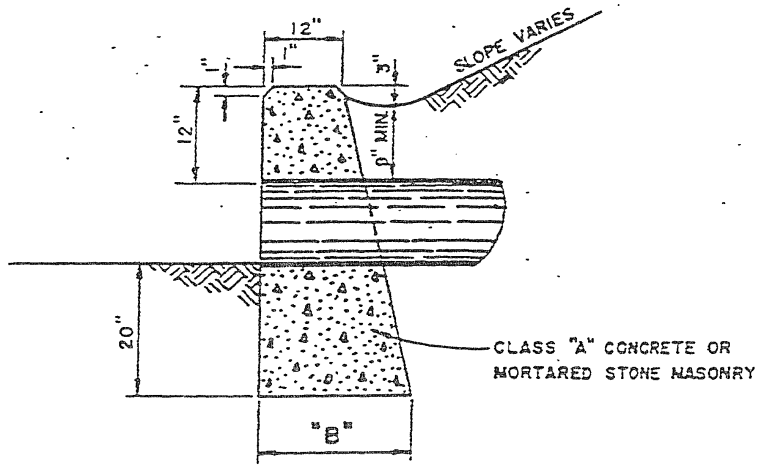

SECTION

DIAM.	"H"	"B"	"L"
12"	3'-8"	1'-11"	4'-0"
15"	3'-11"	1'-11¾"	5'-0"
18"	4'-2"	2'-0½"	6'-0"
21"	4'-5"	2'-1¼"	7'-0"
24"	4'-8"	2'-2"	8'-0"
30"	5'-2"	2'-3½"	10'-0"

STRAIGHT ENDWALL FOR CIRCULAR PIPE

DRAWING NO. 6
SCALE: 1"=2' DATE: 6-15-77

WILLIAMSON COUNTY PLANNING COMMISSION

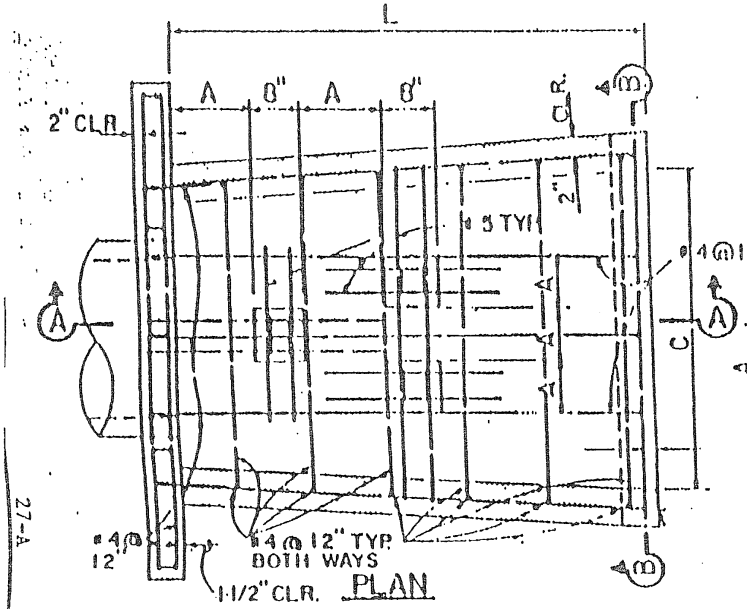

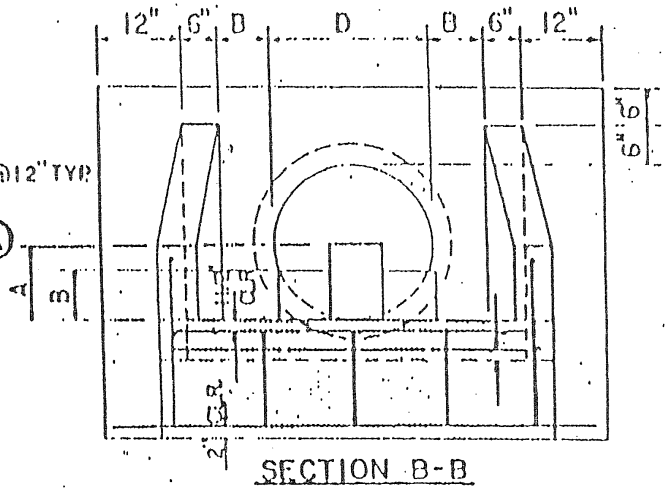

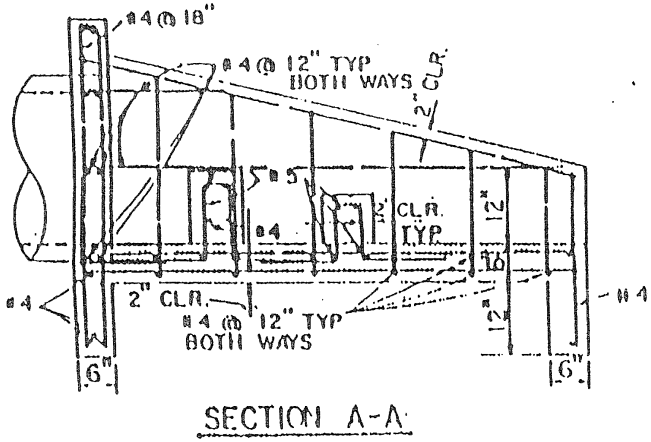

	DIMENSIONS IN INCHES										
D	18	21	24	27	30	33	36	42	48	54	60
A	9	10	12	14	15	16	18	21	24	27	30
B	6	7	8	9	10	11	12	14	16	18	20
C	32	42	48	54	60	66	72	84	96	108	120
L	54	63	72	81	90	99	108	126	144	162	180

27-A

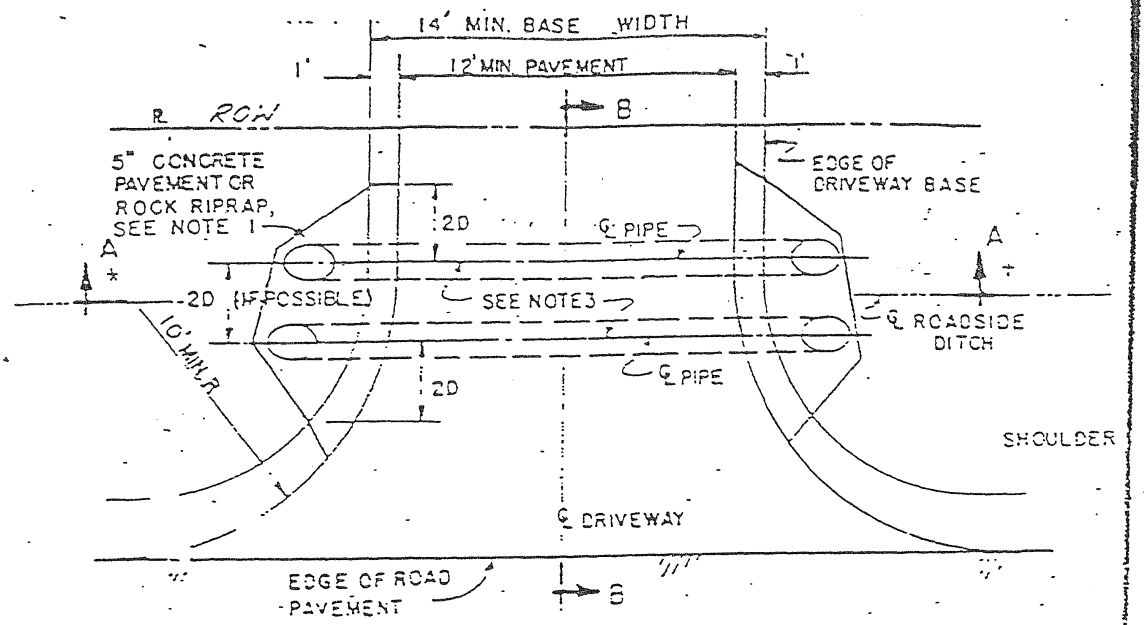

PLAN VIEW

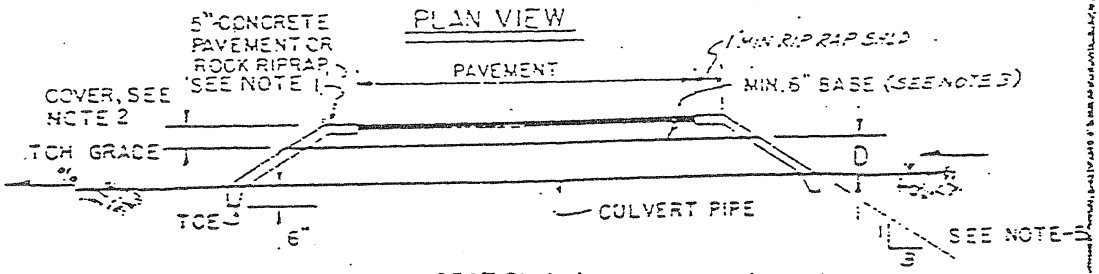

SECTION A-A

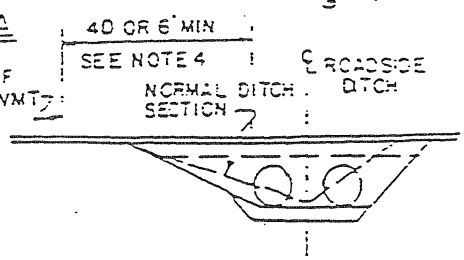

SECTION B-B

NOTES:

1. 5" CONCRETE PAVEMENT OR MORTARED ROCK RIPRAP SHALL BE INSTALLED WITH DITCH GRADES OVER 5%.
2. MINIMUM COVER OVER CONCRETE PIPE SHALL BE 6" AND 9" OVER CMP OR CMPA.
3. MULTIPLE PIPES SHALL BE USED IF REQUIRED PIPE DIAMETER OF RISE PLUS REQUIRED COVER EXCEED DITCH FLOW LINE DEPTH BY MORE THAN 6".
4. WHERE DISTANCE FROM ROAD PAVEMENT EDGE TO NEAR EDGE OF CULVERT FOR MULTIPLE CULVERT INSTALLATIONS EXCEEDS SIX(6) FT. OR 4 x PIPE DIA., CONSIDER DIP-TYPE DRIVE
5. FOR COLLECTORS OR ARTERIALS, INCREASE SLOPE TO 6:1

DRIVEWAY WITH CULVERT

27-B

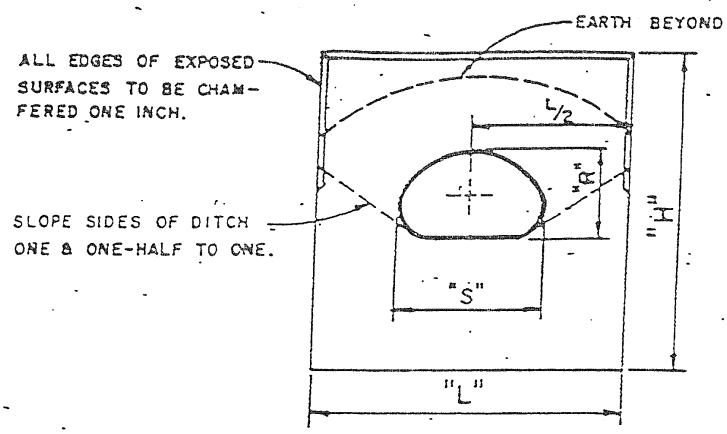

ELEVATION

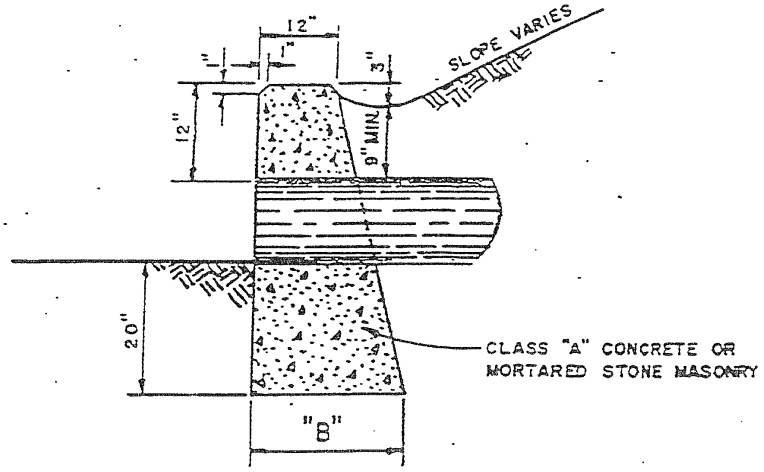

SECTION

"S" x "R"	"H"	"B"	"L"
18" x 11"	3'-7"	1'-10¾"	4'-3"
22" x 13"	3'-9"	1'-11¼"	5'-1"
25" x 16"	4'-0"	2'-0"	6'-1"
29" x 18"	4'-2"	2'-0½"	6'-11"
36" x 22"	4'-6"	2'-1½"	8'-6"
43" x 27"	4'-11"	2'-2¾"	10'-4"
50" x 31"	5'-3"	2'-3¾"	11'-11"

STRAIGHT ENDWALL FOR PIPE ARCH

DRAWING NO. 7
SCALE: 1" = 2' DATE: 6-15-77

WILLIAMSON COUNTY PLANNING COMMISSION

28

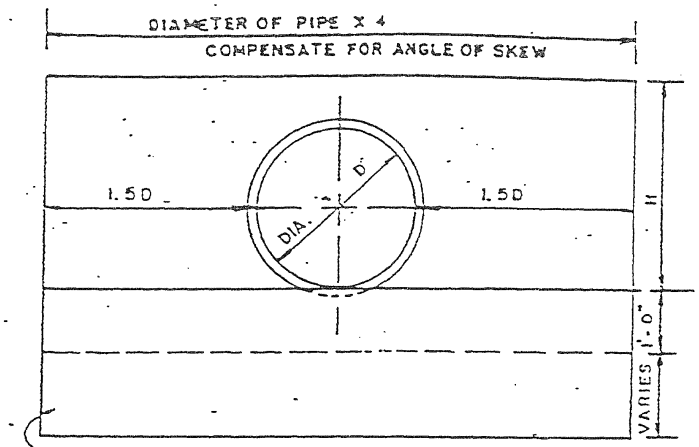

NOTE:
DIMENSION "H" = D + 1'-6" MIN. OR AS CALLED FOR ON PLANS.
*1'-10" WHERE TRASH RACK IS REQUIRED
**QUANTITIES INCLUDE CUT-OFF WALL

PLAN

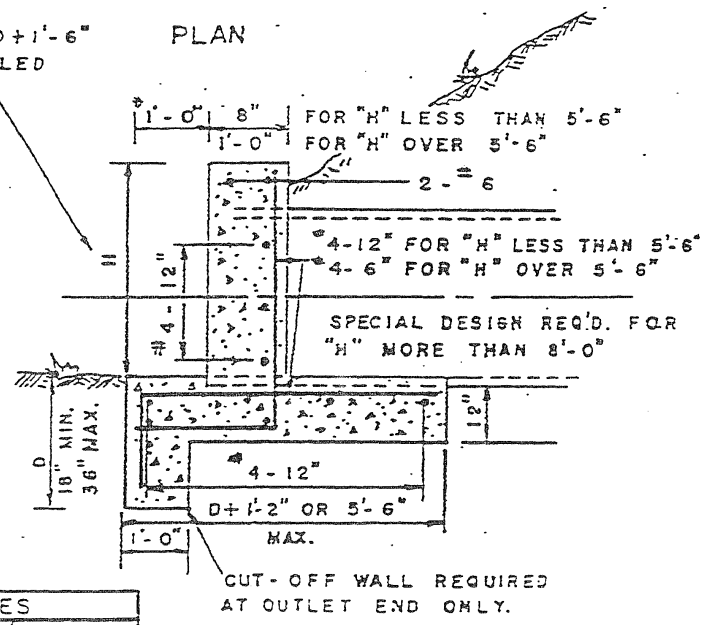

SECTION

QUANTITIES		
PIPE DIA.	CONC. C.Y.**	REINF. STL LBS.**
12	0.7	35
15	0.9	45
18	1.2	55
24	2.3	105
30	3.0	130
36	4.3	180
42	5.5	230
48	7.9	350
54	9.6	410
60	11.0	480
66	12.5	520
72	14.2	590

REINF. CONC. HEADWALL

DRAWING NO. 8
SCALE: NONE DATE: 6-15-77

WILLIAMSON COUNTY PLANNING COMMISSION

29

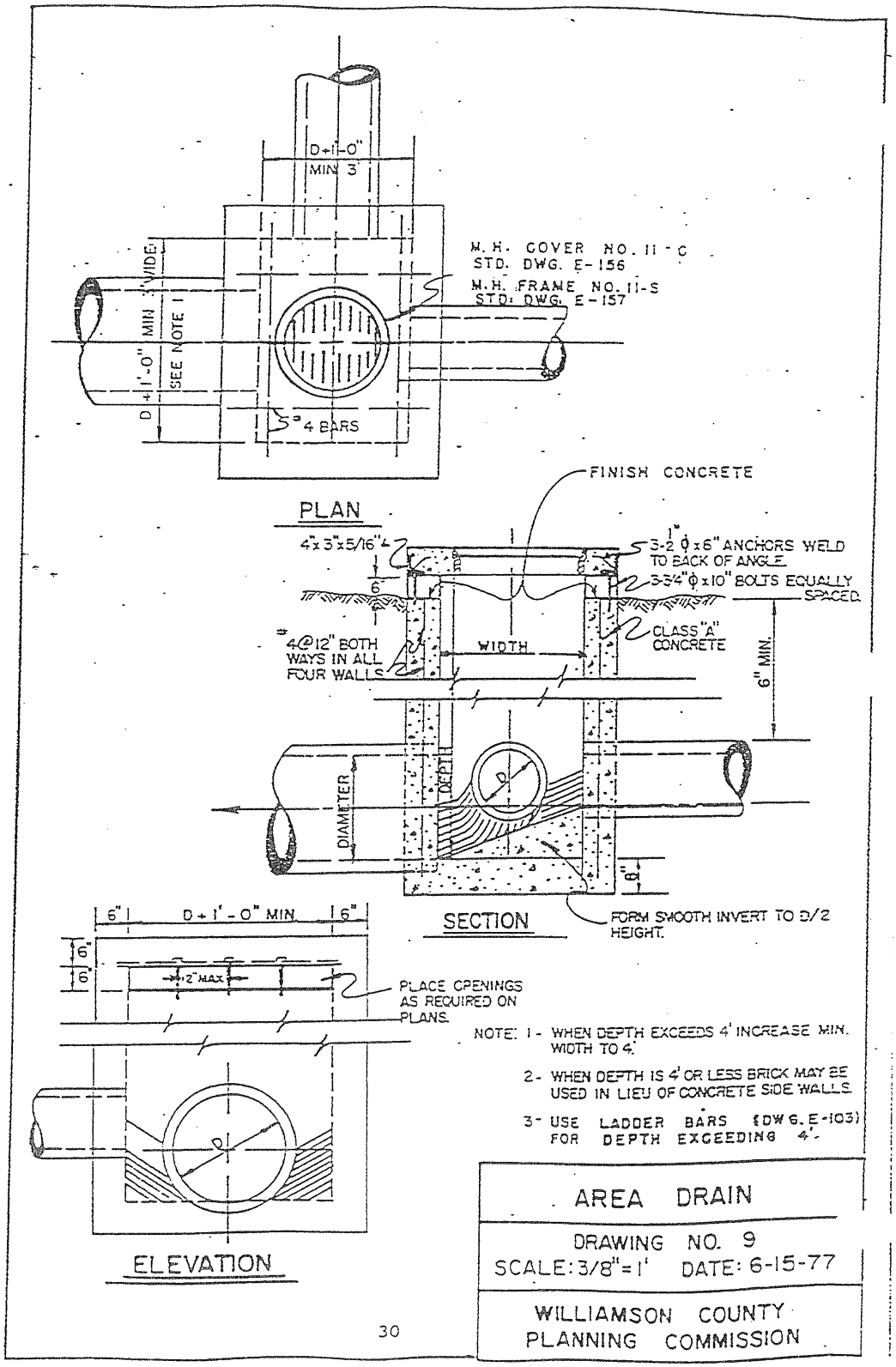
D+1'-0"
MIN 3'
M.H. COVER NO. 11-C
STD. DWG. E-156
M.H. FRAME NO. 11-S
STD. DWG. E-157
D+1'-0" MIN 3' WIDE
SEE NOTE 1
5" 4 BARS
PLAN
FINISH CONCRETE
4"x3"x5/16" L
3-2 1/2" ϕ x 6" ANCHORS WELD TO BACK OF ANGLE
3-3/4" ϕ x 10" BOLTS EQUALLY SPACED
6"
4@12" BOTH WAYS IN ALL FOUR WALLS
WIDTH
CLASS "A" CONCRETE
6" MIN.
DEPTH
DIAMETER
8"
SECTION
FORM SMOOTH INVERT TO D/2 HEIGHT.
6"
D+1'-0" MIN
6"
6"
6"
2" MAX
PLACE OPENINGS AS REQUIRED ON PLANS.
NOTE: 1- WHEN DEPTH EXCEEDS 4' INCREASE MIN. WIDTH TO 4'.
2- WHEN DEPTH IS 4' OR LESS BRICK MAY BE USED IN LIEU OF CONCRETE SIDE WALLS.
3- USE LADDER BARS (DWG. E-103) FOR DEPTH EXCEEDING 4'.
ELEVATION
AREA DRAIN
DRAWING NO. 9
SCALE: 3/8" = 1'
DATE: 6-15-77
WILLIAMSON COUNTY PLANNING COMMISSION
30

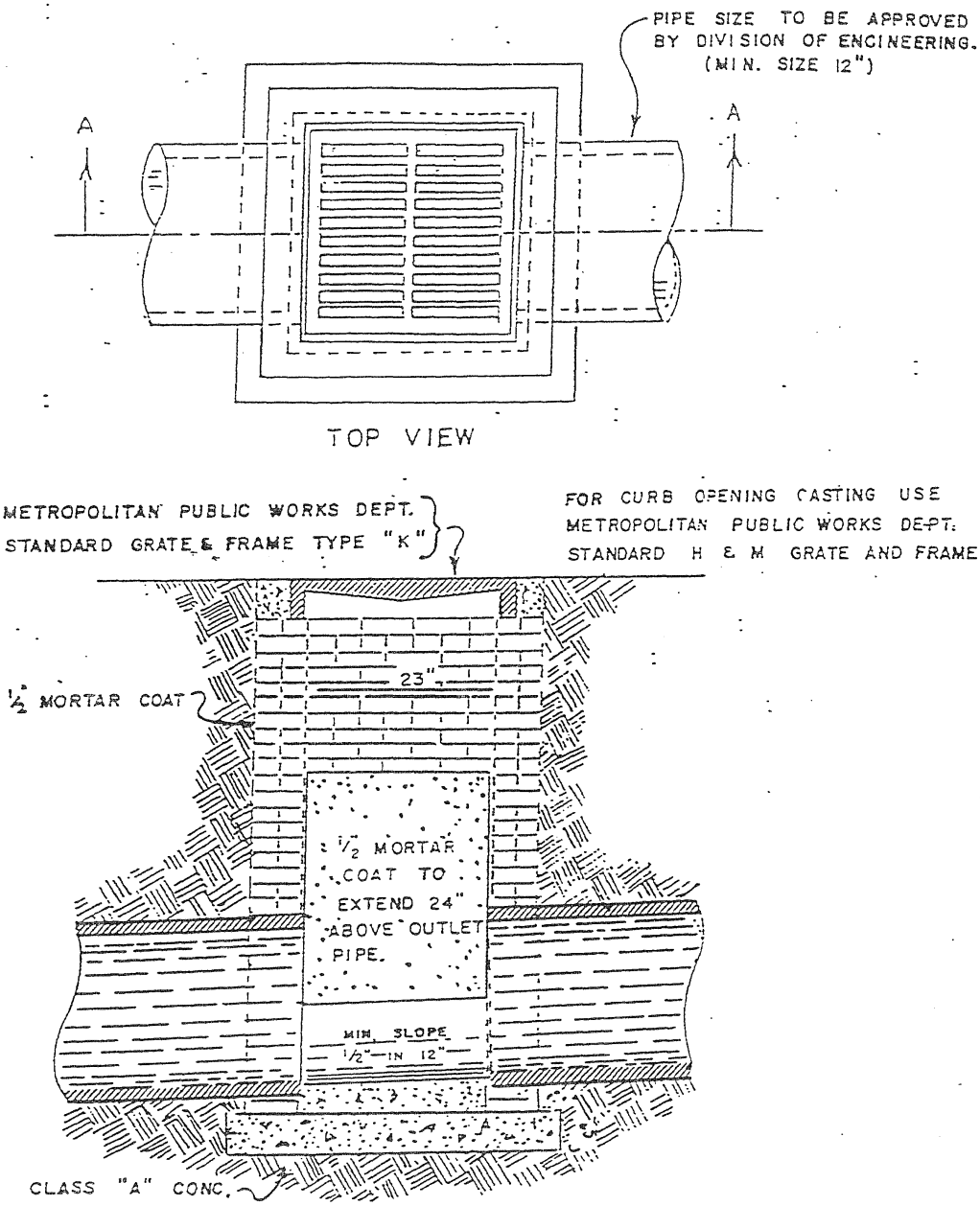

TYPICAL JUNCTION BOX INLET
DRAWING NO. 10 SCALE: 1" = 2' DATE: 6-15-77
WILLIAMSON COUNTY PLANNING COMMISSION

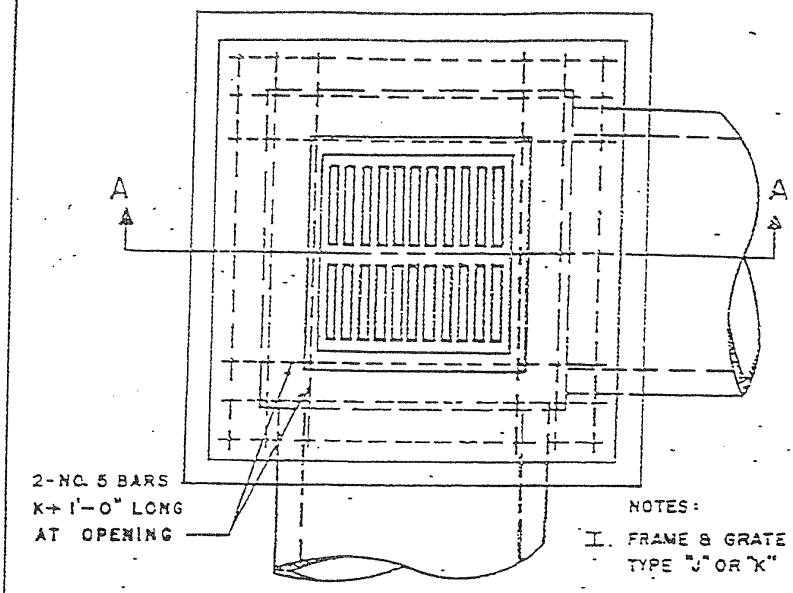

PLAN

NOTES:

I. FRAME & GRATE ARE STANDARD TYPE "J" OR "K"

II. SEE E-103 FOR DETAIL OF STANDARD LADDER BARS.

III. PERMISSION REQUIRED FROM ENGINEER FOR "H_2" LESS THAN MIN. SHOWN.

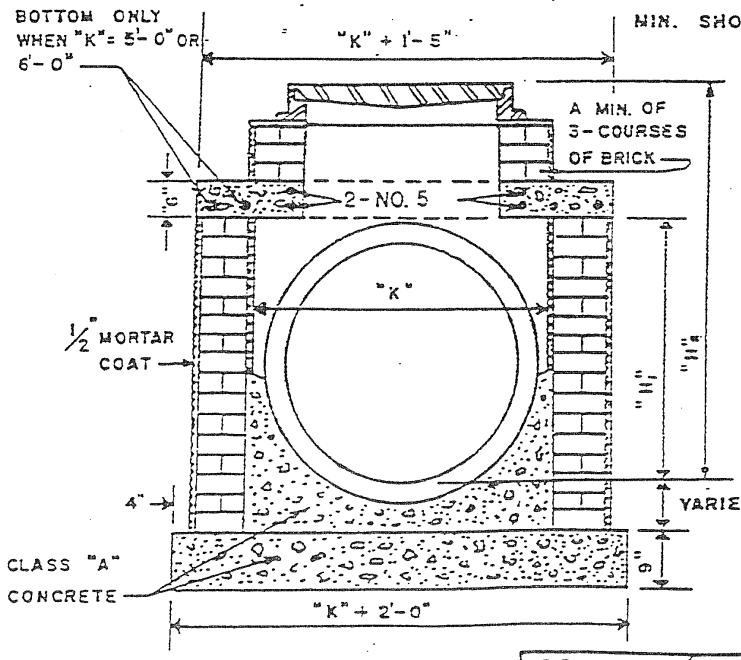

DIMENSION			
PIPE DIA.	MIN. K	MIN. H_1	MIN. H_2
36"	4'-0"	3'-10"	5'-0"
42"	5'-0"	4'-5"	5'-7"
48"	5'-0"	4'-11"	6'-1"
54"	6'-0"	5'-6"	6'-8"
60"	6'-0"	6'-0"	7'-2"

SECTION A-A

COMBINATION M.H. INLET
SHALLOW TYPE

DRAWING NO. 11
SCALE: 1"= 2' DATE: 6-15-77

WILLIAMSON COUNTY
PLANNING COMMISSION

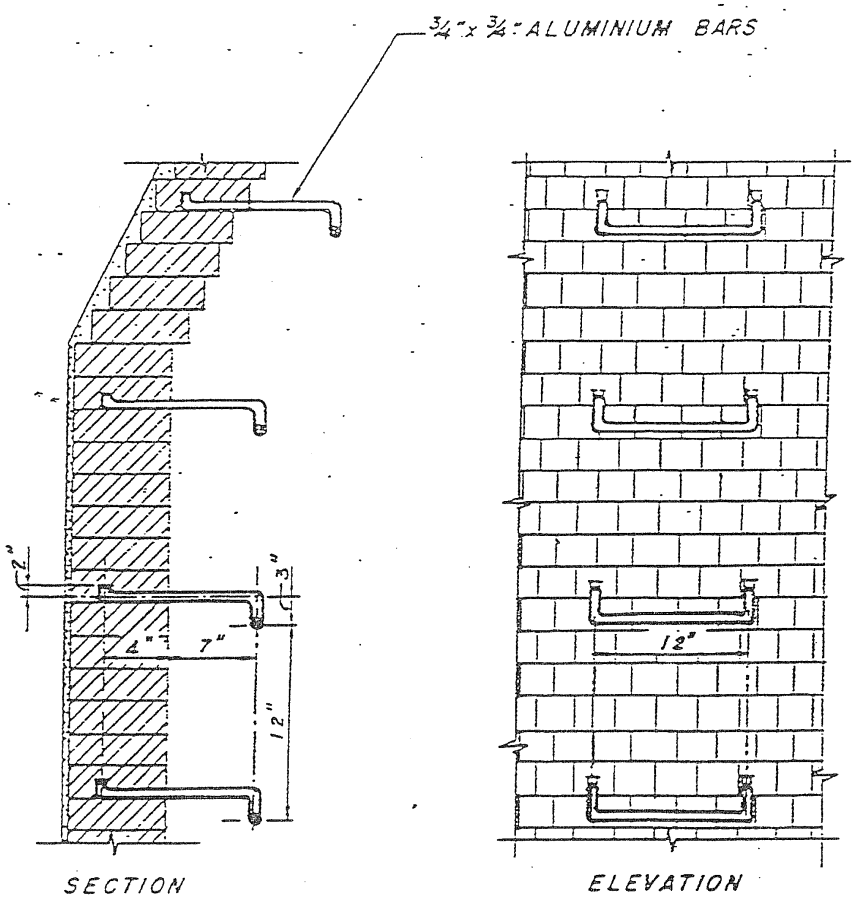

DETAIL OF STANDARD LADDER BARS
DRAWING NO. 12 SCALE: 1" = 1' DATE: 6-15-77
WILLIAMSON COUNTY PLANNING COMMISSION

33

REVISED FROM: 1-18-57

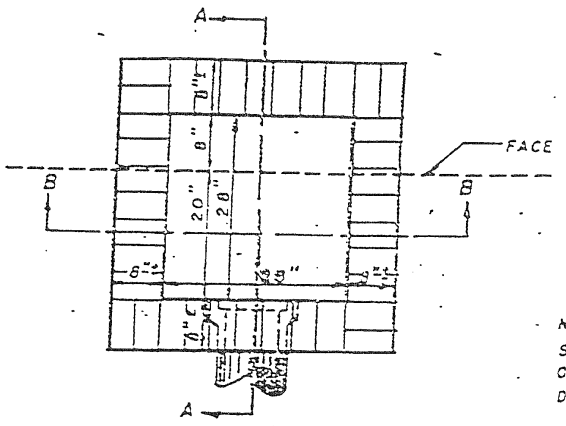

PLAN

NOTE: CASTINGS "M" AND "H" SHOWN IN PLACE. CASTINGS "J" OR "K" TO BE USED WHERE DIRECTED.

* MIN. SLOPE 1" IN 12".

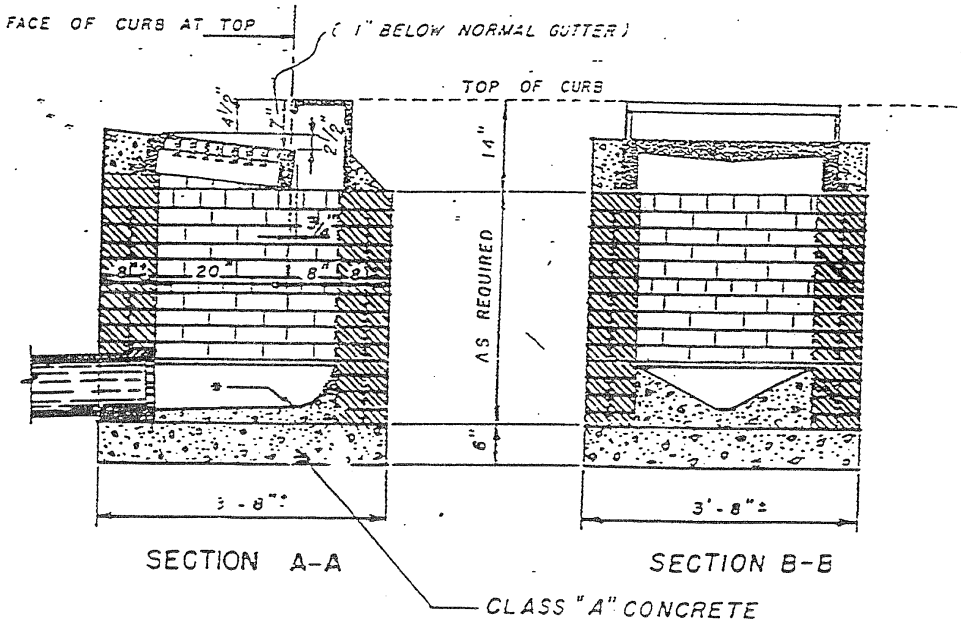

SECTION A-A

SECTION B-B

10-59

DETAILS OF SINGLE INLET
DRAWING NO. 13 SCALE: 1"=2' DATE: 6-15-77
WILLIAMSON COUNTY PLANNING COMMISSION

34

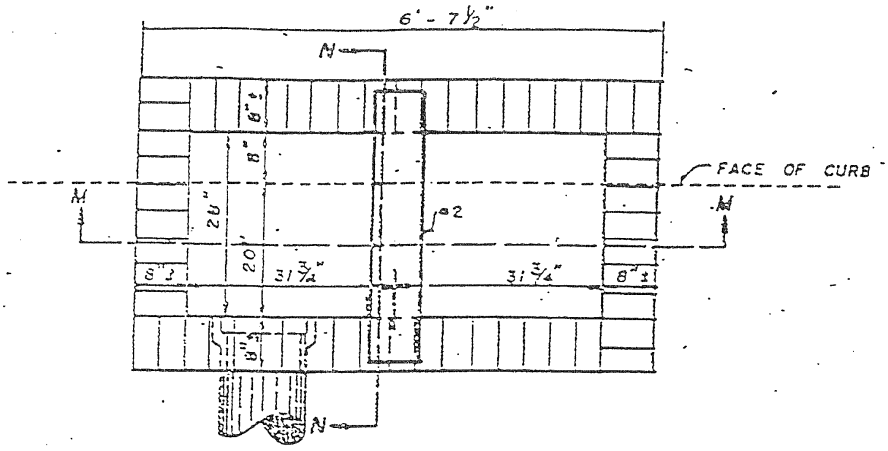

PLAN

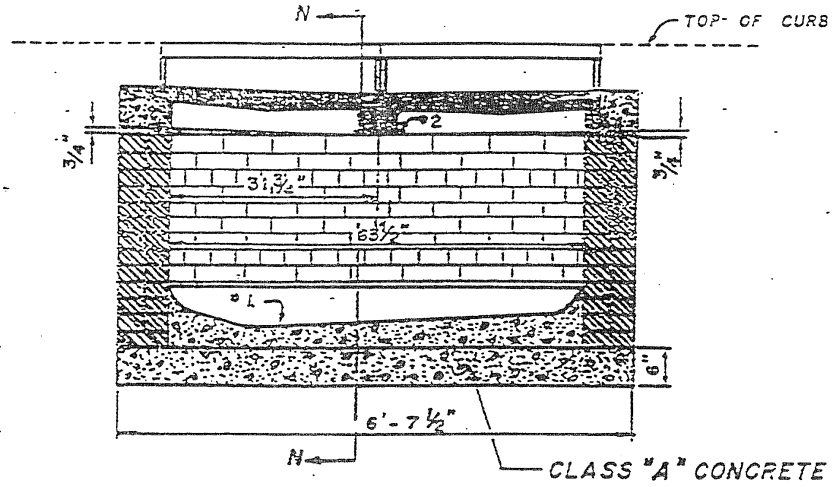

SECTION M-M

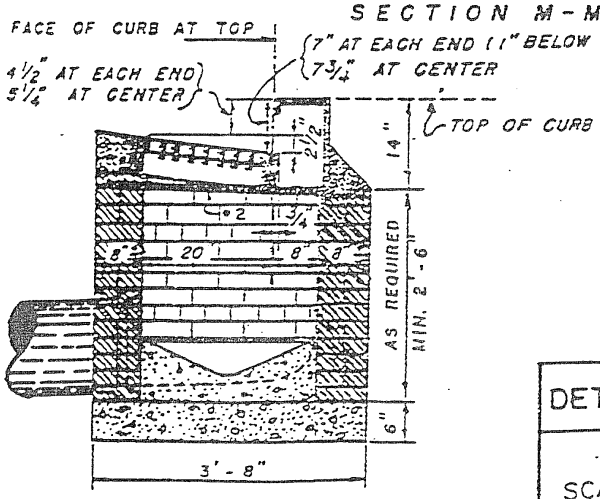

SECTION N-N

NOTE: CASTINGS "M" AND "H" SHOWN IN PLACE. CASTINGS "J" OR "K" TO BE USED WHERE DIRECTED.

#1. MIN. SLOPE ¾" IN 12"

#2. CAST IRON LINTEL TO BE 1" X 6" X 42". WEIGHT = APPROXIMATELY 70 LBS.

DETAILS OF DOUBLE INLET
DRAWING NO. 14 SCALE: 1" = 2' DATE: 6-15-77
WILLIAMSON COUNTY PLANNING COMMISSION

35

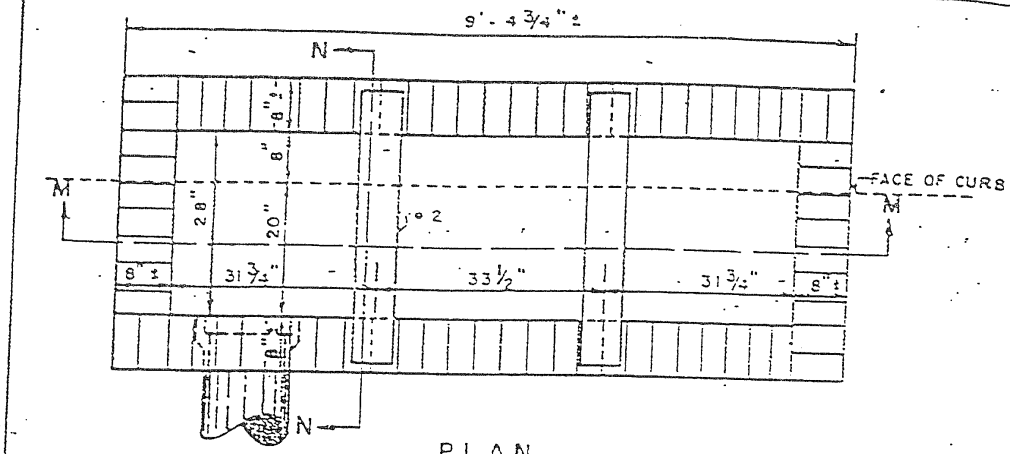

PLAN

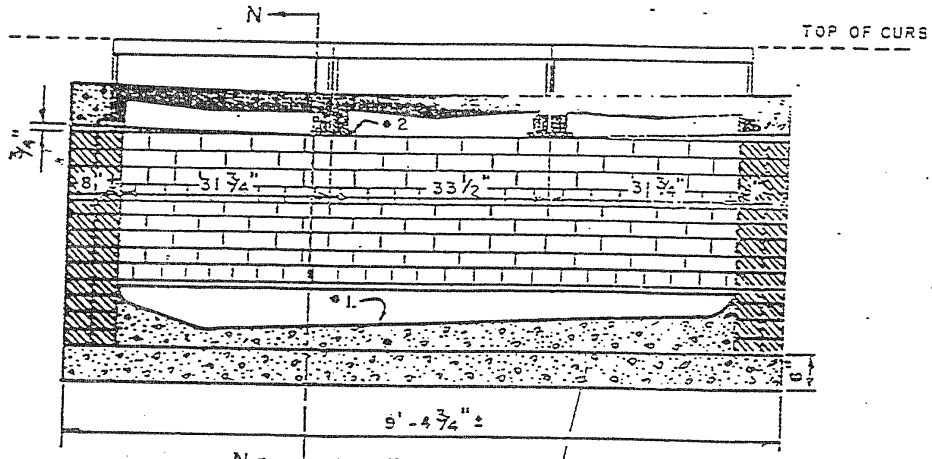

SECTION M-M

CLASS "A" CONCRETE

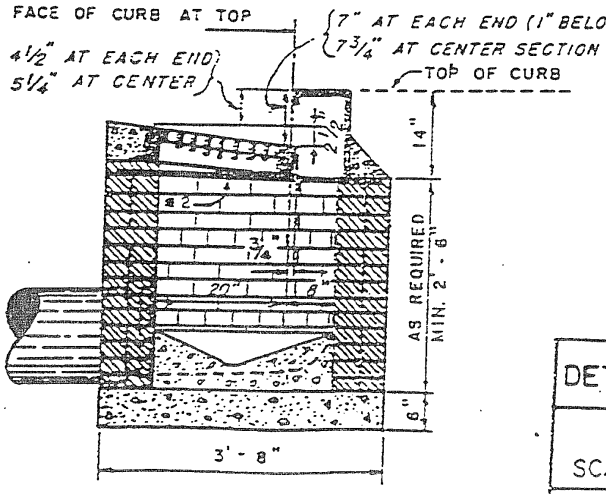

SECTION N-N

NOTE: CASTINGS "M" AND "H" SHOWN IN PLACE. CASTINGS "J" OR "K" TO BE USED WHERE DIRECTED.

#1. MIN. SLOPE 1/2" IN 12"

#2. CAST IRON LINTEL TO BE 1" X 6" X 42". WEIGHT= APPROXIMATELY 70 LBS.

DETAILS OF TRIPLE INLET
DRAWING NO. 15 SCALE: 1"= 2' DATE: 6-15-77
WILLIAMSON COUNTY PLANNING COMMISSION

36

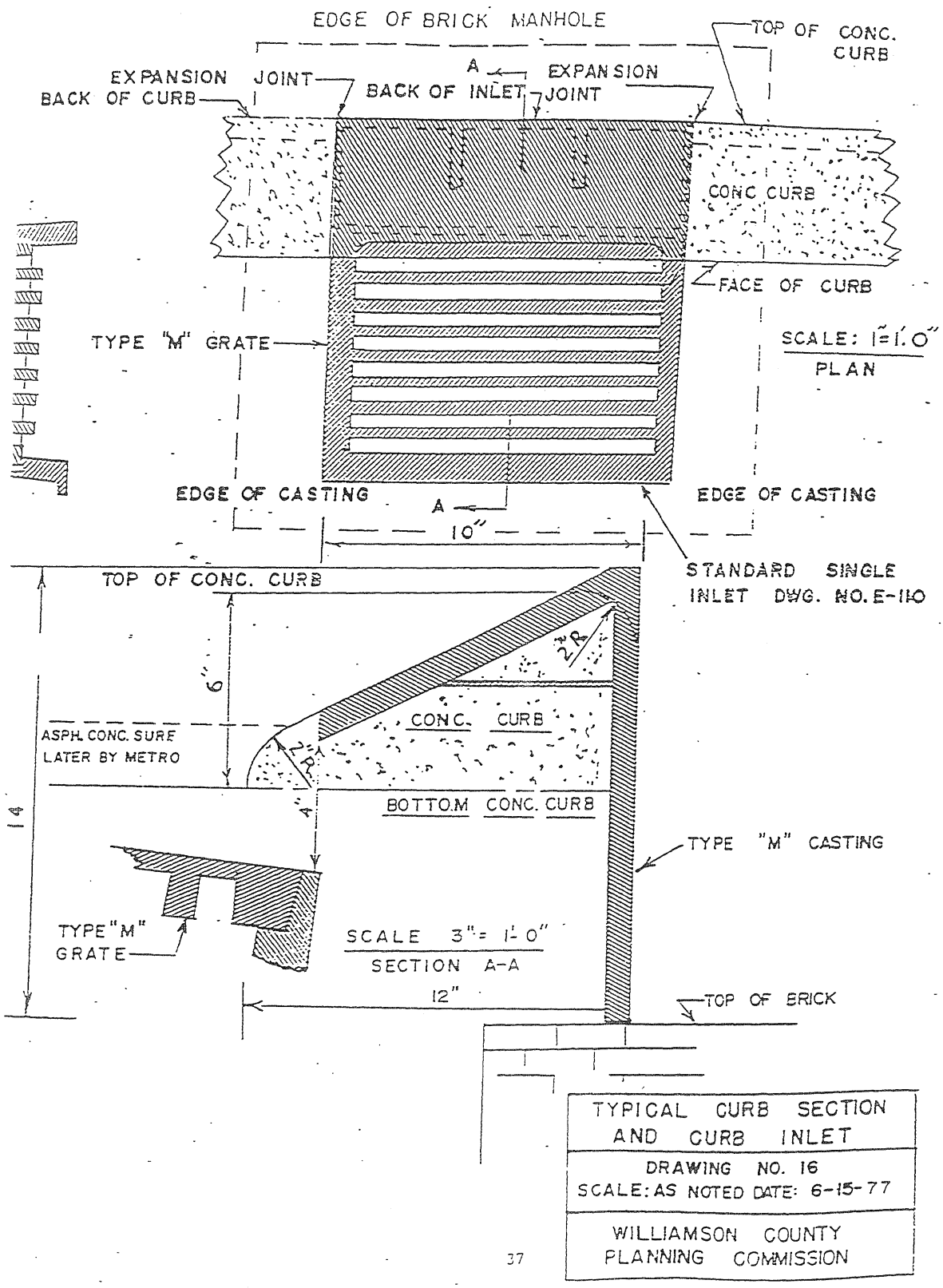

TYPICAL CURB SECTION AND CURB INLET
DRAWING NO. 16 SCALE: AS NOTED DATE: 6-15-77
WILLIAMSON COUNTY PLANNING COMMISSION

37

NOTE: OMIT BASE FLANGE ON ONE SIDE OF FRAME FOR DOUBLE INSTALLATIONS AND END FRAMES OF OTHER MULTIPLE INSTALLATIONS. OMIT ON TWO SIDES (OPPOSITE) FOR CENTER UNITS OF MULTIPLE INSTALLATIONS.

FOR INSTALLATION WITH CURB INLET TYPE "H" OMIT BASE FLANGE ON ONE SIDE OF SINGLE; TWO ADJACENT SIDES OF DOUBLE; AND THREE SIDES OF CENTER UNITS OF OTHER MULTIPLE INSTALLATIONS.

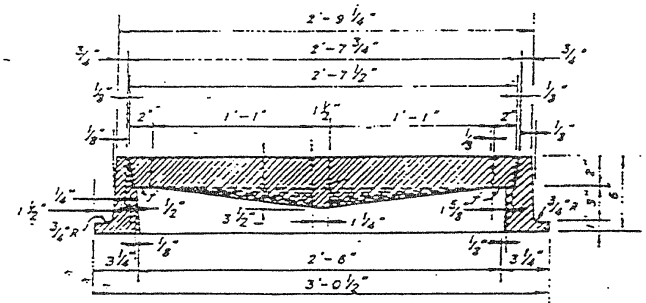

SECTION C-C

NOTE: CONTACT SURFACES OF FRAME AND GRATE MARKED "f" ARE TO BE MACHINED.

TOTAL AREA OF ALL OPENINGS: 2.94 SQ. FT.

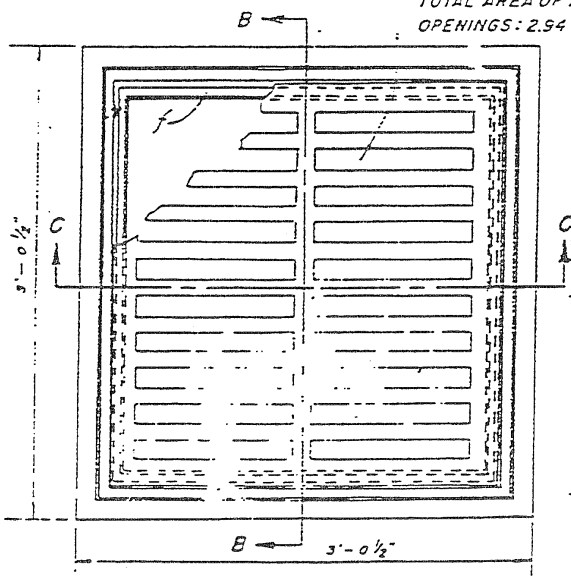

PLAN

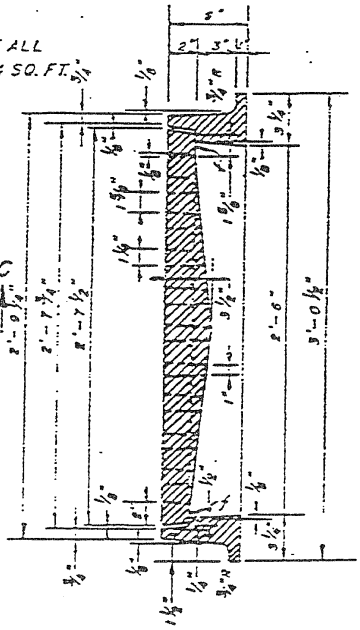

SECTION B-B

ALLEY GRATE INLET & FRAME TYPE "K"

CALCULATED WEIGHTS: GRATE – 330 LB.
SINGLE FRAME – 345 LB.
END FRAME – 330 LB.
CENTER FRAME – 315 LB.
SPECIAL CENTER FRAME – 300 LB.

CASTING DETAIL TYPE "K"
DRAWING NO. 17 SCALE: 1" = 1' DATE: 6-15-77
WILLIAMSON COUNTY PLANNING COMMISSION

CURB INLET
CALCULATED WEIGHT: 200 LBS.

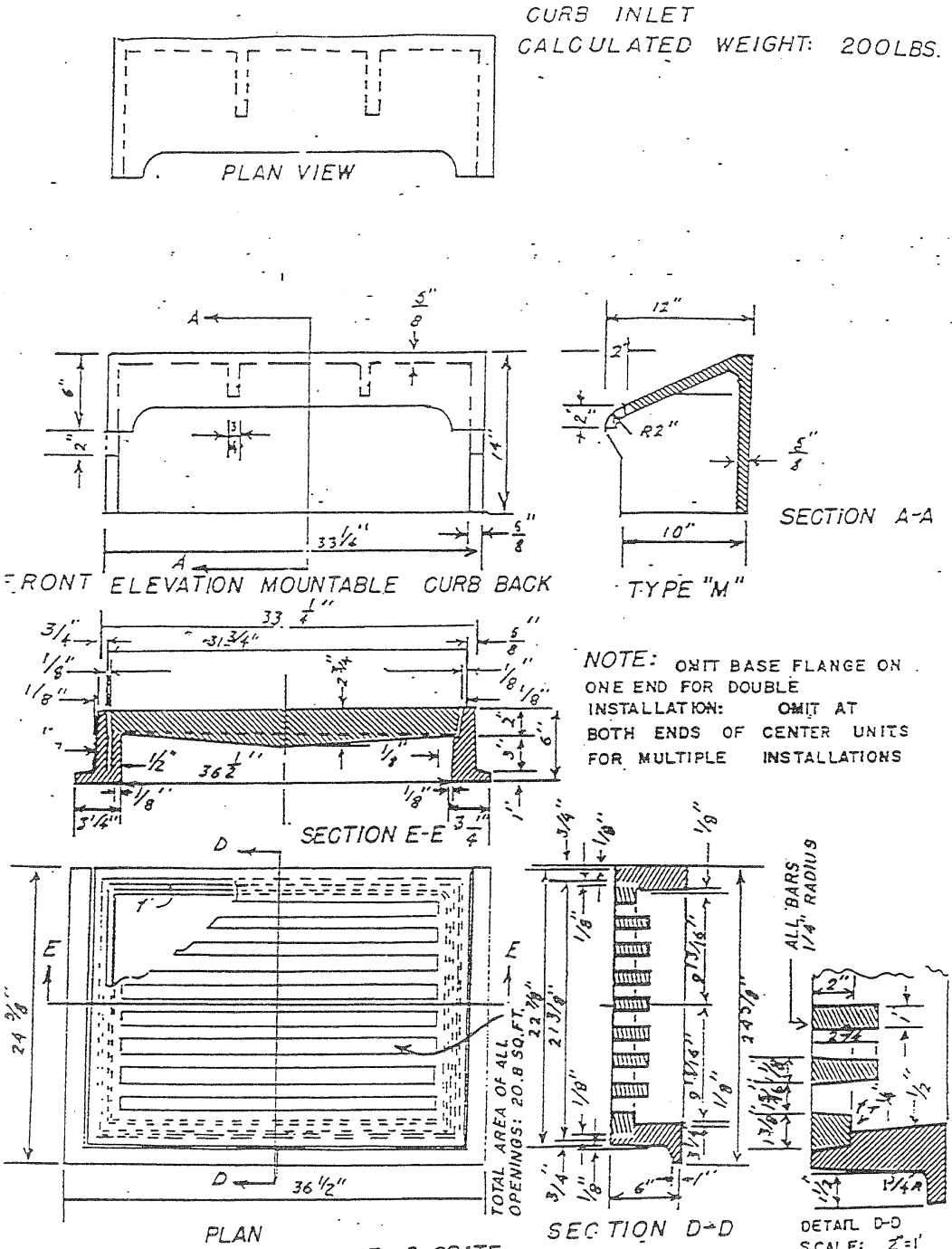

PLAN
GUTTER INLET FRAME & GRATE
TYPE "M"

CALCULATED WEIGHTS: GRATE — 210 LB.
SINGLE FRAME — 285 LB.
END FRAME — 275 LB.
CENTER FRAME — 265 LB.

CURB INLET & GUTTER CASTING	
DRAWING NO. 18	
SCALE: 1"= 1'	DATE: 6-15-77
WILLIAMSON COUNTY PLANNING COMMISSION	

39

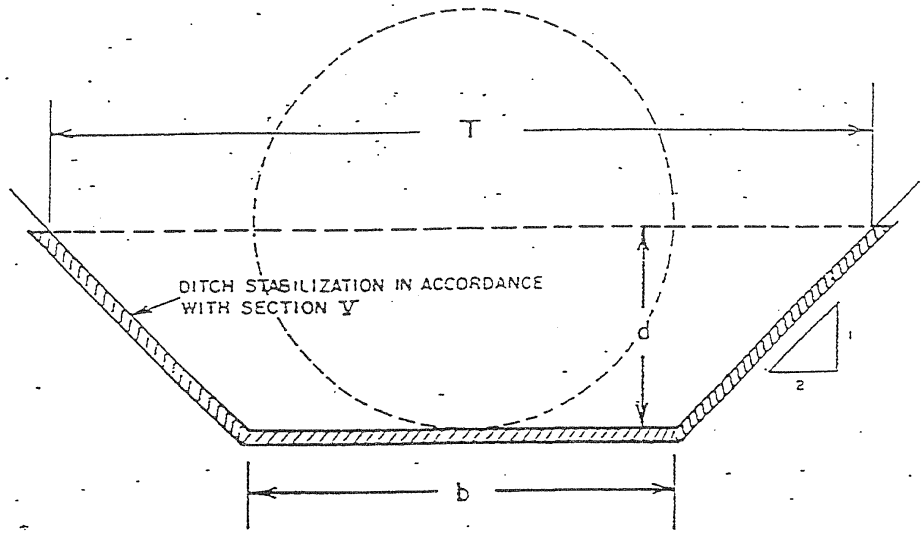

b = Pipe Diameter + 2 Feet

T = b + 4d

d = 1/2 Pipe Diameter

TYPICAL STABILIZED DITCH SECTION
DRAWING NO. 19 SCALE: NONE DATE: 6-15-77
WILLIAMSON COUNTY PLANNING COMMISSION

40

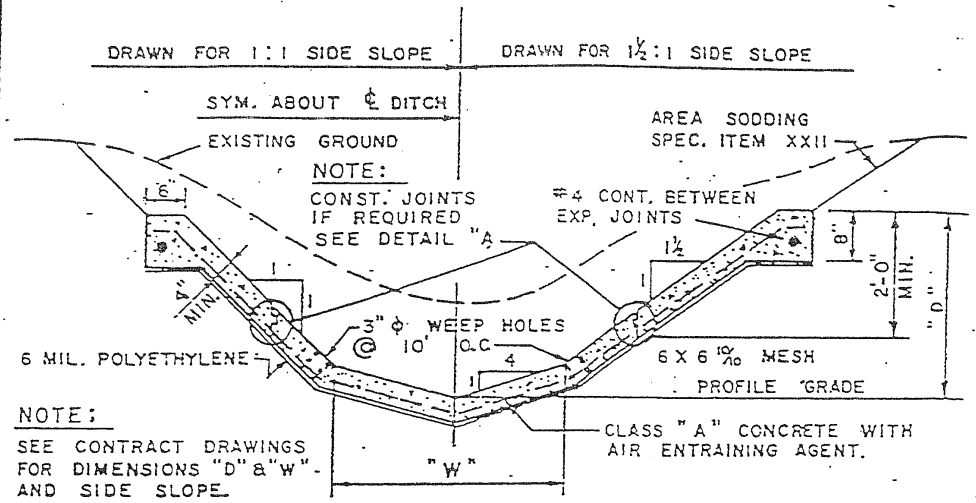

NOTE:
SEE CONTRACT DRAWINGS FOR DIMENSIONS "D" & "W" AND SIDE SLOPE.

TYPICAL SECTION

SCALE: 1" = 2'-0"

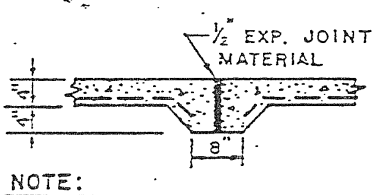

NOTE:
EXPANSION JOINTS TO BE PLACED AT 40' MAX. O.C.

TYPICAL SECTION AT EXPANSION JOINTS

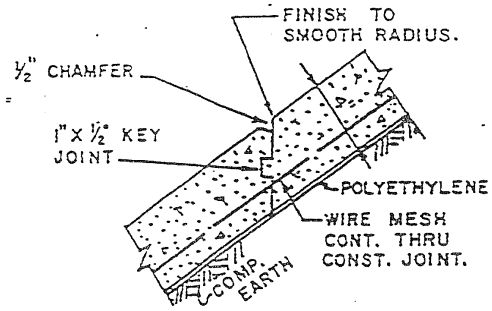

DETAIL "A"

SCALE: 1½" = 1'-0"

NOTE:
1. TRANSVERSE GROOVE MARKING TO BE PLACED IN TOP OF CONCRETE AT 10' O.C. BETWEEN EXP. JOINTS.
2. TOP SURFACE OF CONCRETE LINING TO HAVE A LIGHT, BROOM FINISH.

CONSTRUCTION JOINTS SHALL BE USED ONLY WHERE DEPTH OF LINING PERMITS A MINIMUM DEPTH OF 2'-0" OF LINING ABOVE THE JOINTS AS SHOWN IN TYPICAL SECTION ABOVE.

CONCRETE LINED DITCH
DRAWING NO. 20
SCALE: 1"=2'-0" DATE: 10-10-63
METROPOLITAN PUBLIC WORKS DEPT. ENGINEERING DIVISION

41

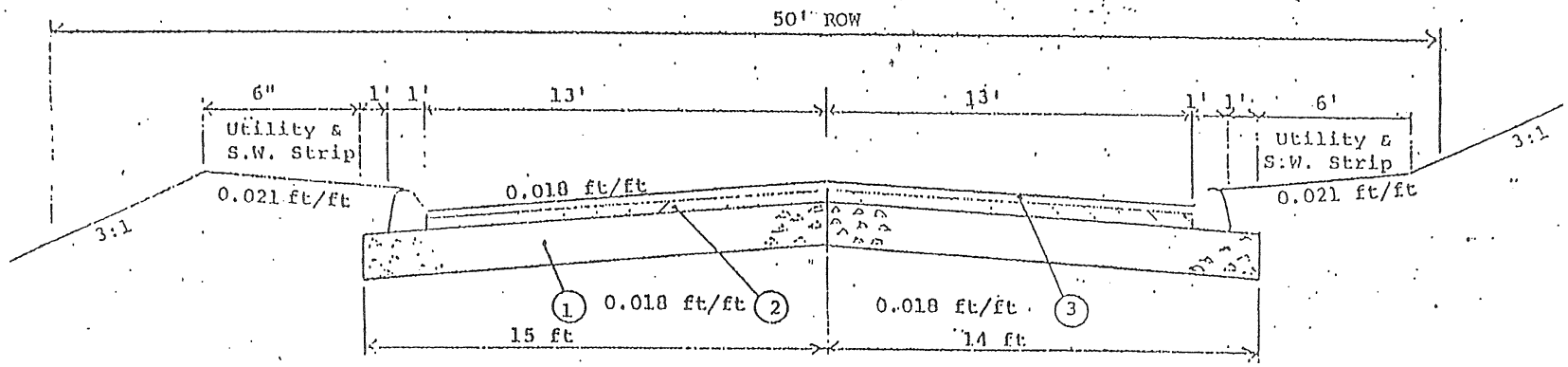

1. Mineral Aggregate Base @ 8" for
   303-01 Mineral Aggregate Type "A" Base Grading D
   402.01 Bit. Material for Prime Coat (PC) 0.30-0.35 Gal/S.Y.
   402-02 Aggregate for cover Mat'l(P.C.) 8-12 lbs./S.Y.

2. Bitumimous Leveling-Wearing Surface Grading "CW"
   2.0" 200 lbs./S.Y.
   307-03.03 Aggregate (BPMB-HM) Grading "CW"
   307-03.04 Asphalt Cement (BPMB-HM) Grading "CW"

3. Asphaltic Concrete Surface (Hot Mix) Grading "E"
   1.5" 165#/sq.yd.
   411.02.01 Mineral Aggregate for (ACS) Grading "E"
   411.02.02 Asphalt Cement for (ACS) Grading "E"

NOTES:

Specifications are taken from Tennessee Department of Transportation Bureau of Highways, Nashville Standard specifications for Road and Bridge Construction, Adopted March 1, 1981 and all specification provisions pertaining thereto.

All storm sewers shall be concrete pipe and catch basins shall meet the standards of thi regulation and the State of Tennessee Departi of Transportation Bureau of Highways Standar Specifications and Standard Roadway and Stru Drawings.

TYPICAL RESIDENTIAL ROADWAY SECTION

42

TYPICAL COLLECTOR A[illegible]RTERIAL ROADWAY SECTION

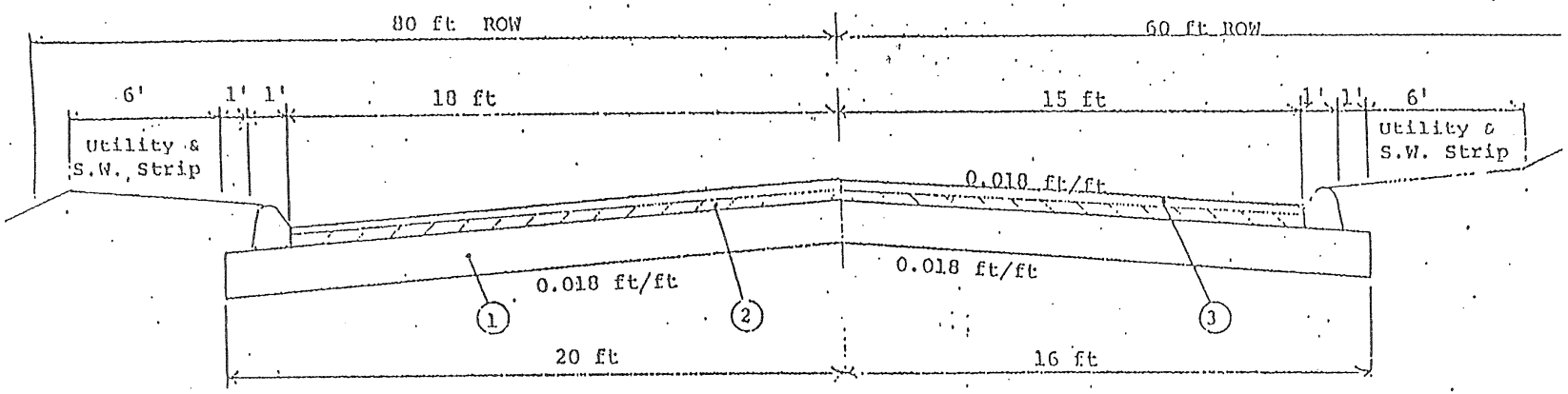

1. Mineral Aggregate Base @ 10"
   303-01 Mineral Aggregate Type "A" Base Grading D
   402.01 Bit. Material for Prime Coat (PC) 0.30-0.35 Gal/S.Y.
   402-02 Aggregate for cover Mat'l (PC) 8-12 lbs./S.Y.

2. Bitumimous Leveling-Wearing Surface Grading "CW"
   2.0" 200 lbs./S.Y.
   307-03.03 Aggregate (BPMB-HM) Grading "CW"
   307-03.04 Asphalt Cement (BPMB-HM) Grading "CW"

3. Asphaltic Concrete surface (Hot Mix) Grading "E"
   1.5" 165#/sq.yd.
   411.02.01 Mineral Aggregate for (ACS) Grading "E"
   411.02.02 Asphalt Cement for (ACS) Grading "E"

NOTE:

Specifications are taken from Tennessee Department of Transportation Bureau of Highways, Nashville Standard specifications for Road and Bridge Construction, Adopted March 1, 1981 and all specification provisions pertaining thereto.

All storm sewers shall be concrete pipe and catch basins shall meet the standards of this regulation and the State of Tennessee Departme of Transportation Bureau of Highways Standard. Specifications and Standard Roadway and Struct Drawings.

TYPICAL COLLECTOR AND ARTERIAL ROADWAY SECTION

TYPICAL ROADWAY SECTION

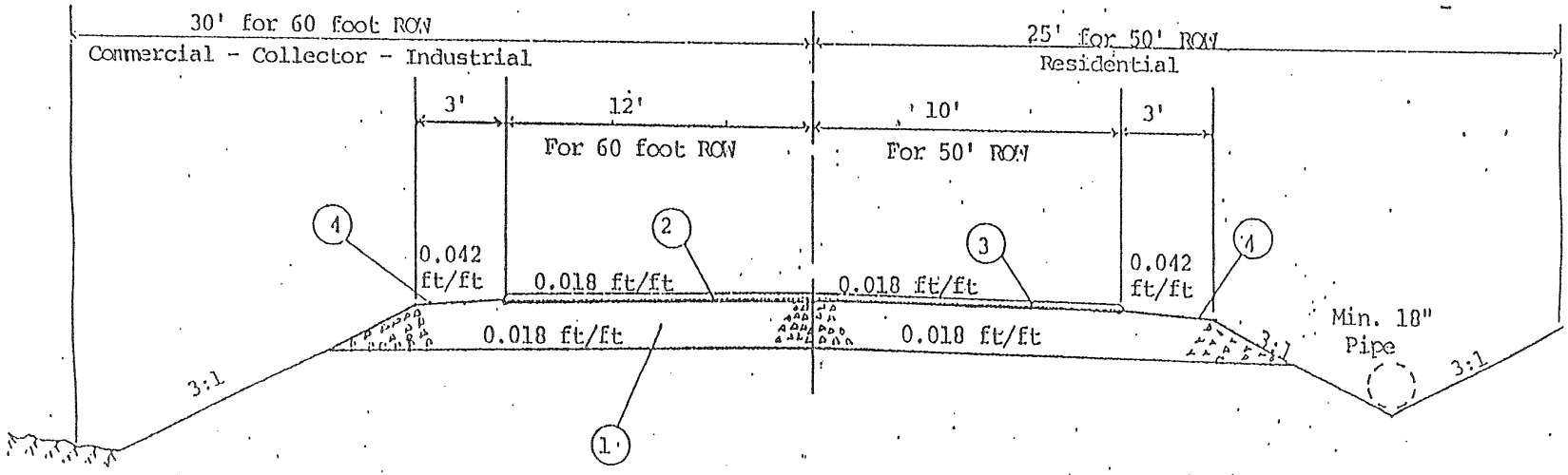

1. Mineral Aggregate Base @ 8"for (50'ROW) 10" for (60'ROW)
   303-01 Mineral Aggregate Type "A" Base Grading D
   402.01 Bit. Material for Prime Coat (PC) 0.30-0.35 Gal/S.Y.
   402-02 Aggregate for cover Mat'l (P.C.) 8-12 lbs./S.Y.

2. Bituminous Leveling-Wearing Surface Grading "CW"
   2.0" 200 lbs./S.Y.
   307-03.03 Aggregate (BPMB-HM) Grading "CW"
   307-03.04 Asphalt Cement (BPMB-HM) Grading "CW"

3. Asphaltic Concrete surface (Hot Mix) Grading "E"
   1.5" 165#/sq.yd.
   411.02.01 Mineral Aggregate for (ACS) Grading "E"
   411.02.02 Asphalt Cement for (ACS) Grading "E"

4. Double Bituminous Surface Treatment
   404-01.01 Bit.Mat'l (DBST) @0.68-0.77 Gal/S.Y.
   404-01.02 Min.Agg. (DBST) @ 50-65 LBS/S.Y.
   402-01 Bit. Mat'l (P.C.) @0.30-0.35 GAL/S.Y.
   402-02 Agg. for Cover Mat'l (P.C.) @ 8-12 LBS/S.Y.

NOTE: Specifications are taken from Tennessee Department of Transportation Bureau of Highways, Nashville Standard specifications for Road and Bridge Construction, Adopted March 1, 1981 and all specification provisions pertaining thereto.

TYPICAL ROADWAY SECTION

DRAWING NO. 21

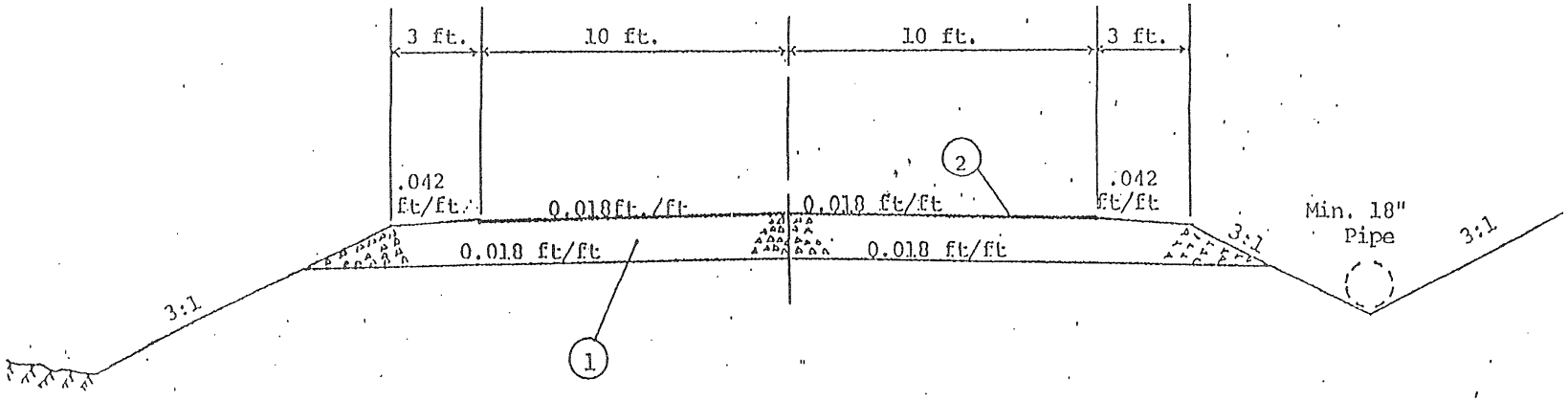

Requirements for Total Lots from 1 to 10

1. Mineral Aggregate Base @ 8"
   303-01 Mineral Aggregate Type "A" Base Grading D

2. Double Bituminous Surface Treatment
   404-01.01 Bit.Mat'l (D.B.ST.)@0.68-0.77 Gal/S.Y.
   404-01.02 Min.Agg.(D.B.S.T.) @ 50-65 LBS/S.Y.
   402-01 Bit. Mat'l. (P.C.) @ 0.30-0.35 GAL/S.Y.
   402-02 Agg. for Cover Mat'l.(P.C.)@ 8-12 LBS/S.Y.

Requirements for Total Lots from 11 to 20

1. Mineral Aggregate Base @ 8"
   303-01 Mineral Aggregate Type "A" Base Grading D
   402.01 Bit. Material for Prime Coat (PC) 0.30-0.35 Gal/S.
   402-02 Aggregate for cover Mat'l(P.C.) 8-12 lbs./S.Y.

2. Bituminous Leveling-Wearing Surface Grading "CW"
   2.0" 200 lbs./S.Y.
   307-03.03 Aggregate(BPMB-HM) Grading "CW"
   307-03.04 Asphalt Cement (BPMB-HM) Grading "CW"

50' RIGHT-OF-WAY REQUIRED

NOTE: Specifications are taken from Tennessee Department of Transportation Bureau of Highways, Nashville Standard specifications for Road and Bridge Construction. Adopted March 1, 1981 and all specification provisions pertaining thereto.

If over 20 lots refer to Drawing 21

TYPICAL CROSS SECTION FOR LARGE LOT DEVELOPMENT

DRAWING NO. 23

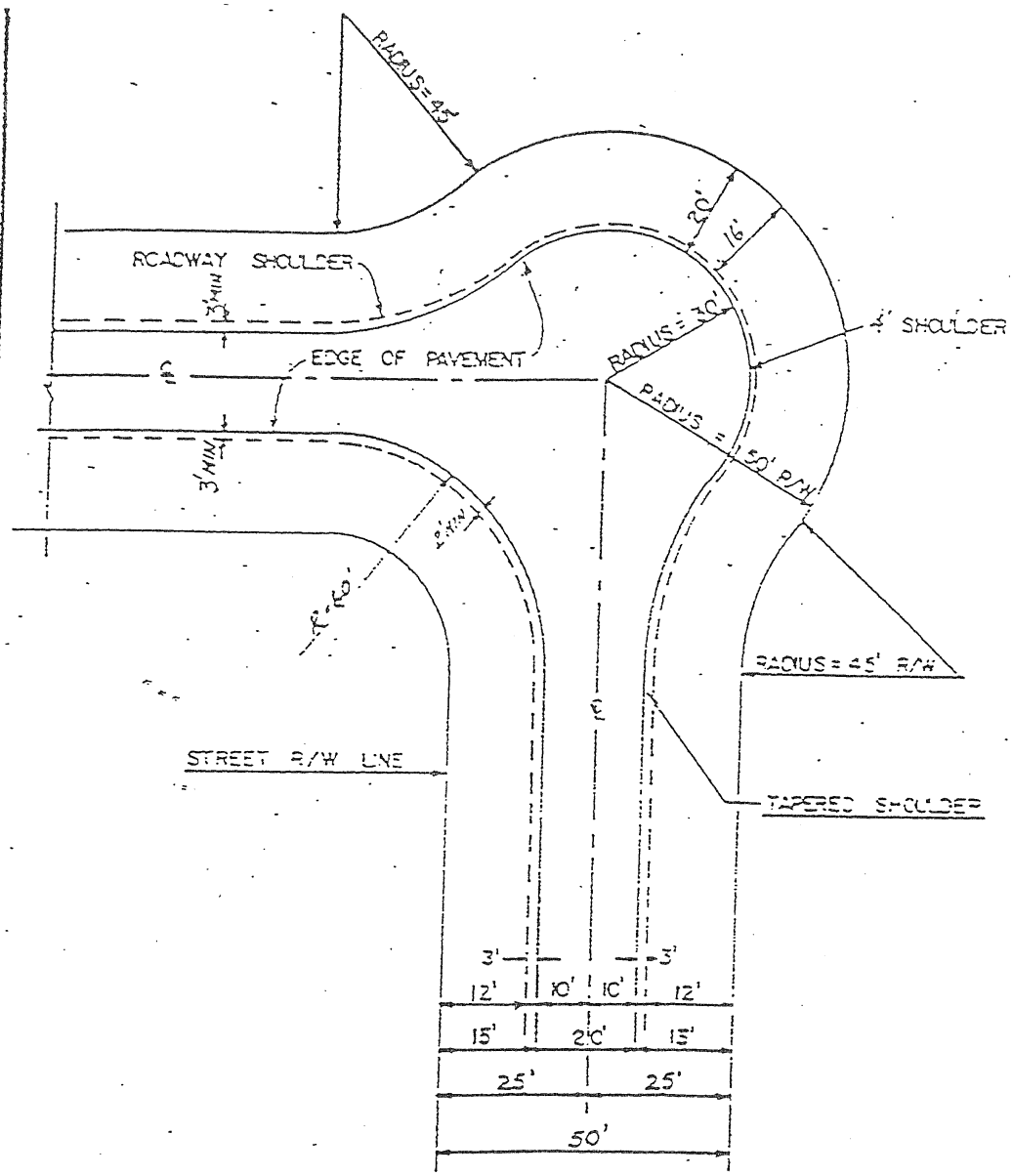

TYPICAL EYEBROW PAVING DETAIL

50' R.O.W.

PAGE 46

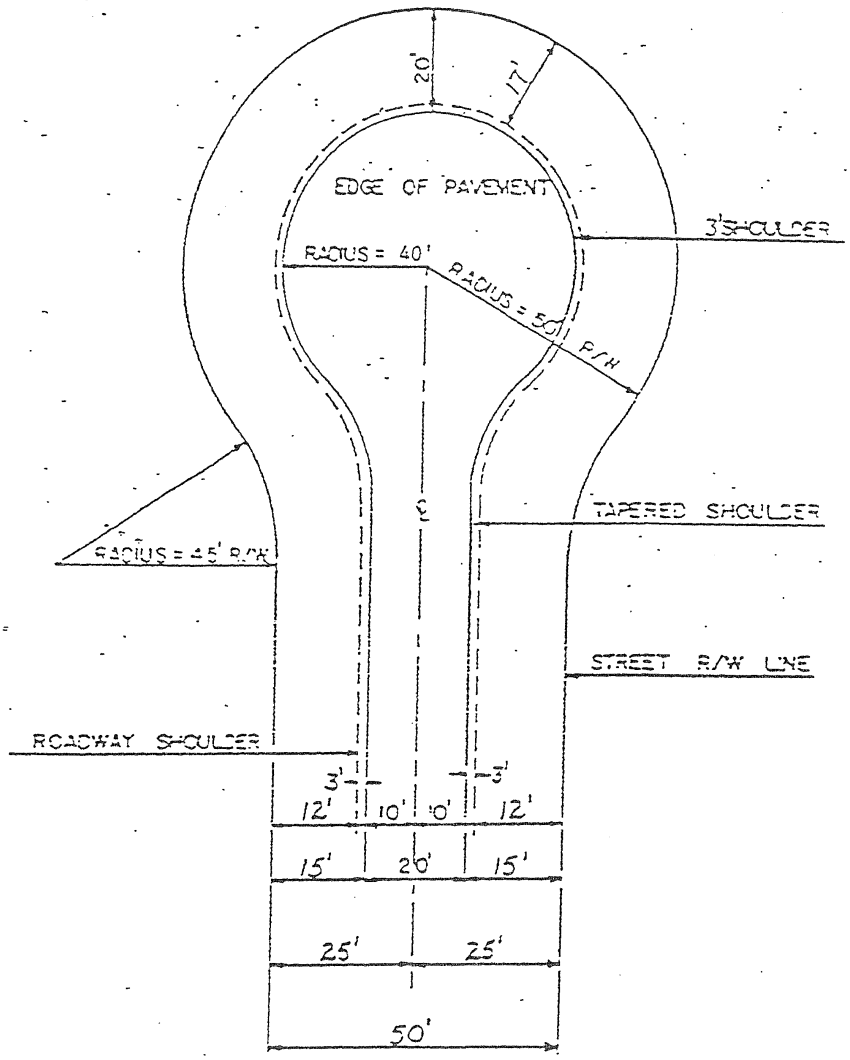

TYPICAL CUL-DE-SAC PAVING DETAIL

50' R.O.W.

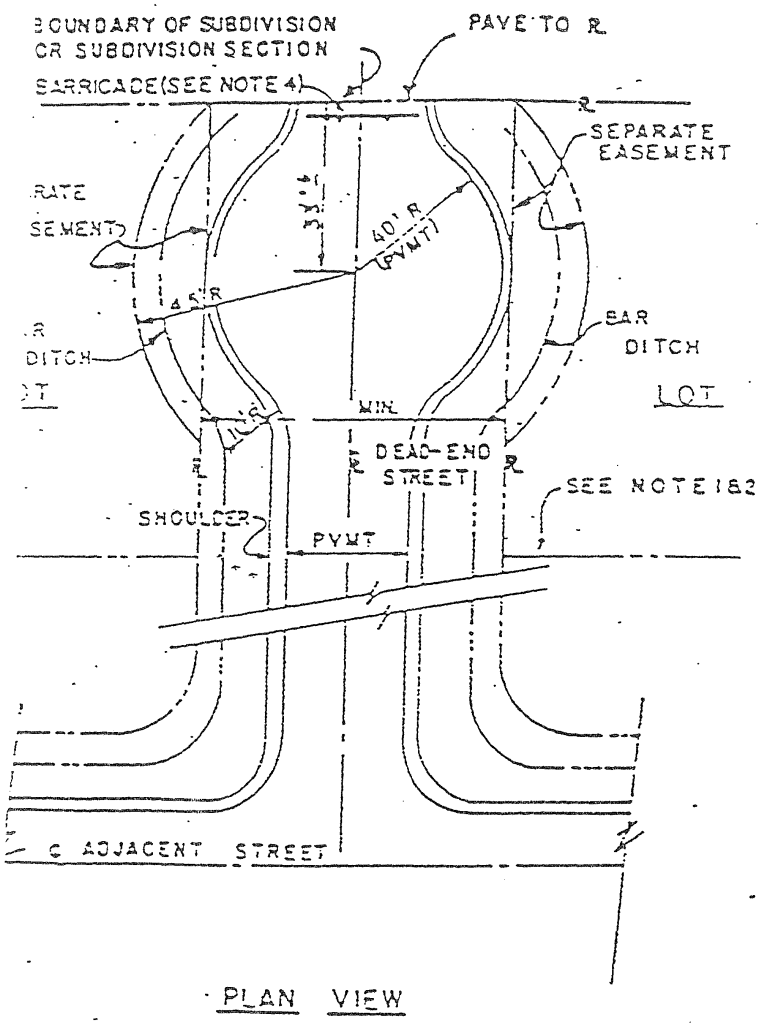

PLAN VIEW

NOTES:

1. Temporary turn around construction and easements may be waived if all lots bounding Dead-End street also front other adjacent streets.

2. If temporary turn-around is waived, access to Dead-End streets from bounding lots shall be prohibited.

3. Separate easement shall be shown as a restriction on bounding lots which may be removed by separate action on continuation of Dead-End street.

4. Standard Williamson County type barricade shall be placed at end of dead-end streets.

TEMPORARY TURN-AROUND ON DEAD-END STREET

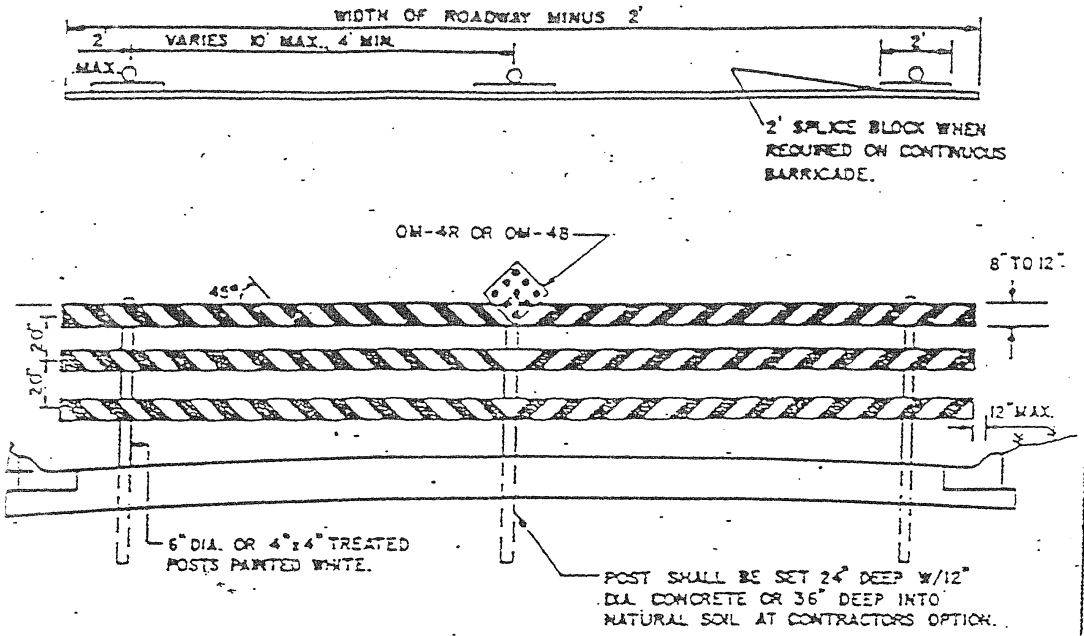

NOTES

1. WIDTH OF RAIL SHALL BE A MINIMUM OF 8" AND MAY BE UP TO A MAXIMUM OF 12", 2" NOMINAL SMOOTH LUMBER.

2. RAILS SHALL BE FASTENED TO EACH POST WITH 1/4" STEEL BOLTS WITH WASHERS ON EACH SIDE. BOLT THREADS SHALL BE PEENED.

3. THE RAILS SHALL RECEIVE TWO COATS OF WHITE OIL BASE OUTSIDE PAINT. THEN SHALL HAVE 6" WIDE REFLECTORIZED RED STRIPES OF TAPE PLACED ON 45° SLOPES, DOWN AND TOWARD THE CENTER OF THE BARRICADE.

4. BARRICADES MAY BE CONSTRUCTED IN SECTIONS OR MAY BE CONTINUOUS ACROSS ROADWAY WIDTH. SPLICES ON CONTINUOUS RAIL BARRICADES SHALL BE AT POSTS AND SHALL HAVE A 2' SPLICE BLOCK ON BACK SIDE OF THE SAME MATERIAL AS RAIL.

5. 18" DIAMOND REFLECTORIZED RED PANEL OR 18" DIAMOND RED OR BLACK PANEL WITH 9-3" DIAMETER RED REFLECTORS SYMMETRICALLY PLACED AT CENTER POSTS, A MINIMUM OF 4' ABOVE GROUND SHALL BE USED FOR END OF ROAD MARKERS.

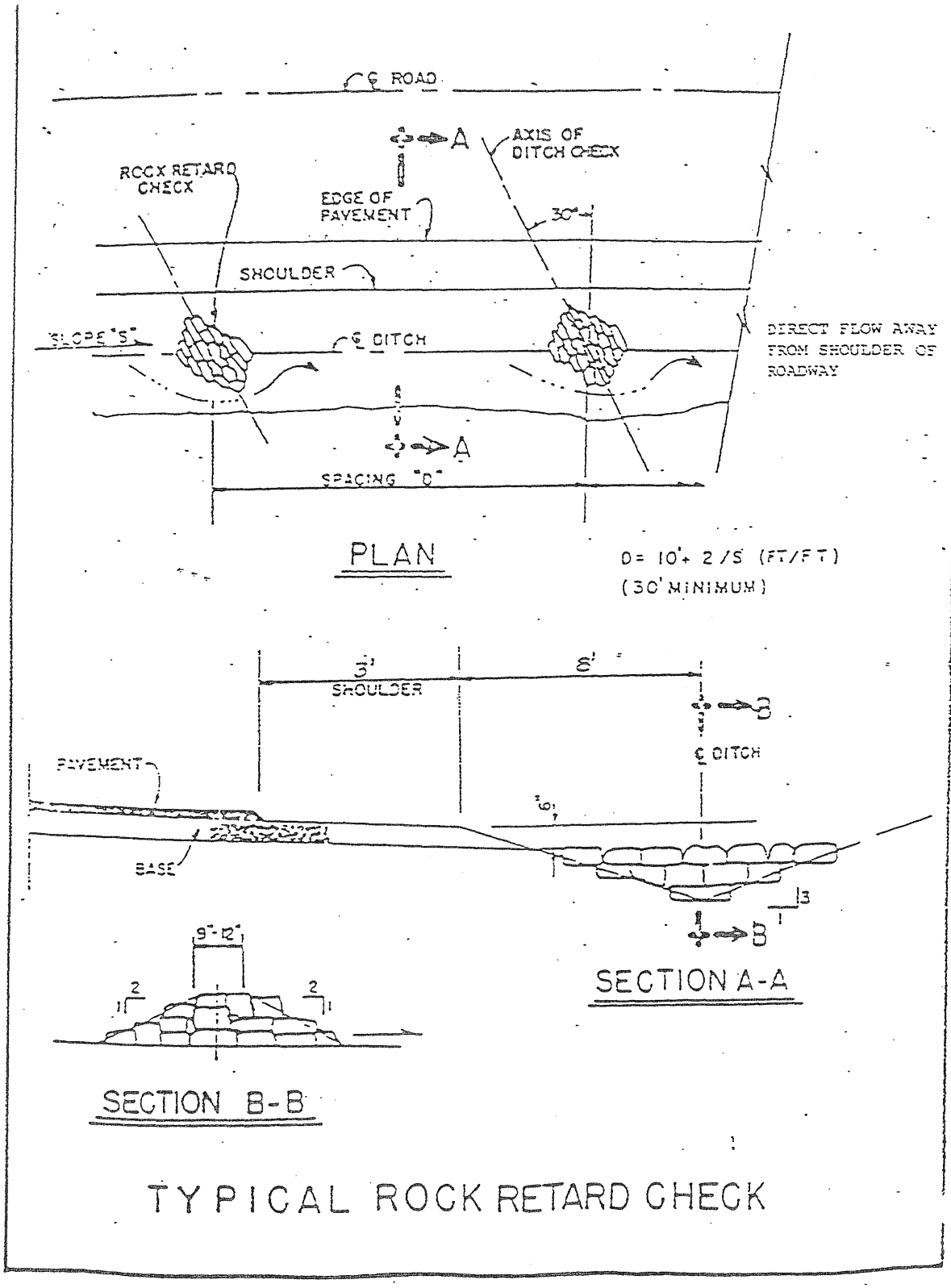
℄ ROAD
A
AXIS OF DITCH CHECK
ROCK RETARD CHECK
EDGE OF PAVEMENT
30'
SHOULDER
SLOPE "S"
℄ DITCH
DIRECT FLOW AWAY FROM SHOULDER OF ROADWAY
A
SPACING "D"
PLAN
D= 10'+ 2/S (FT/FT)
(30' MINIMUM)
3'
8'
SHOULDER
B
℄ DITCH
PAVEMENT
BASE
3
1
B
9"-12"
2
1
2
1
SECTION A-A
SECTION B-B
TYPICAL ROCK RETARD CHECK

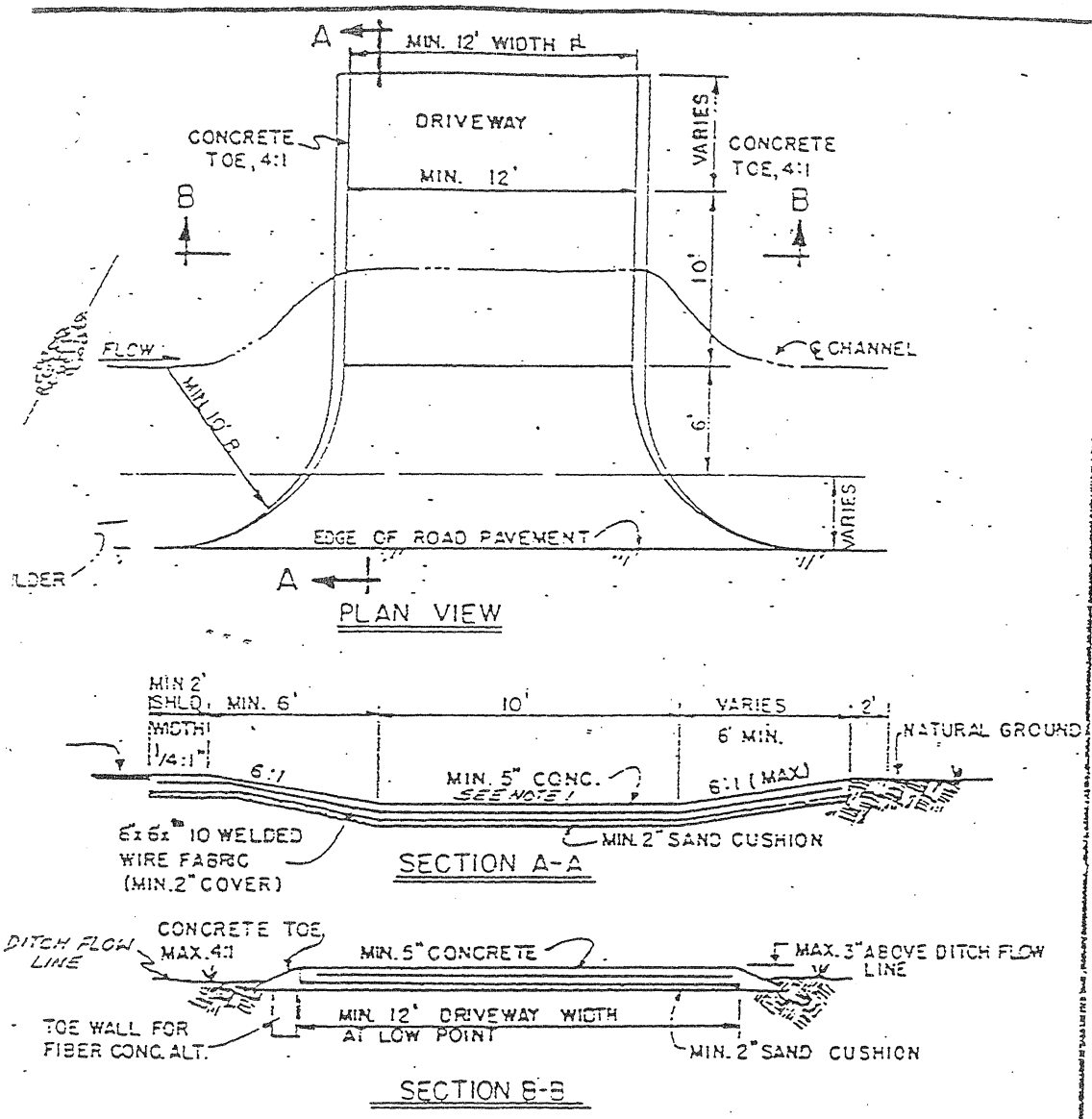

NOTES:

1. AN ACCEPTABLE ALTERNATIVE TO ABOVE IS 3" STEEL FIBER CONCRETE REINFORCED WITH FIBERS AS APPROVED BY THE COUNTY ENGINEER AND WITH 6" x 12" DEEP ANCHORED TOE WALL AND FULL SURFACE VIBRATION.
2. ADD DITCH RETARD 10' UPGRADE OF DRIVE

CONCRETE DIP-TYPE DRIVEWAY

PAGE 51

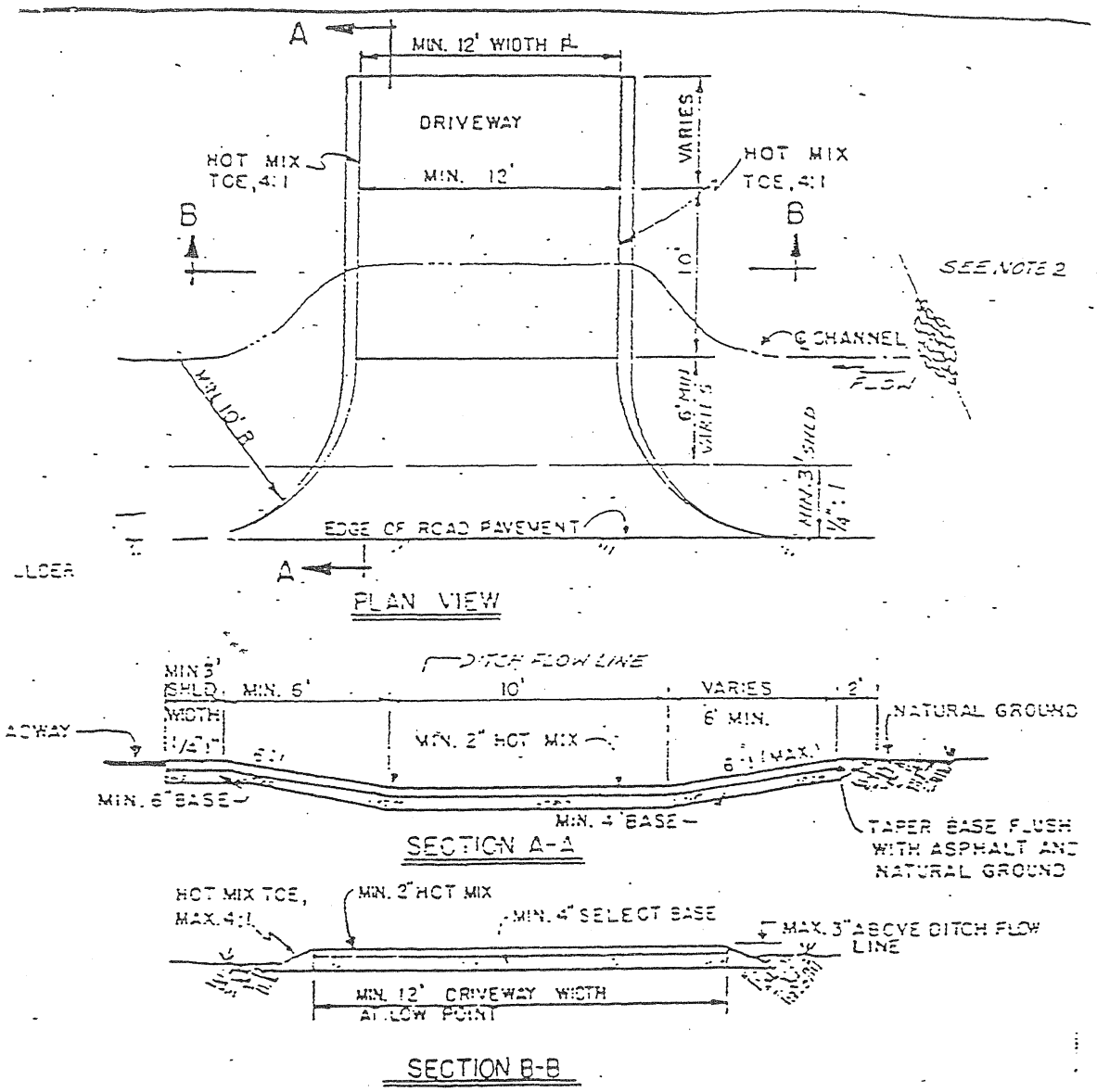

NOTES:

1. USE AS DESIGNED WITH DITCH GRADE FROM 0% TO 3%.
2. ADD DITCH RETARD AT 10' UPGRADE OF DRIVE WITH DITCH GRADE OF 4% TO 6%.
3. USE CONCRETE DIP-TYPE DRIVEWAY AT DITCH GRADES OVER 6%.

ASPHALT DIP-TYPE DRIVEWAY

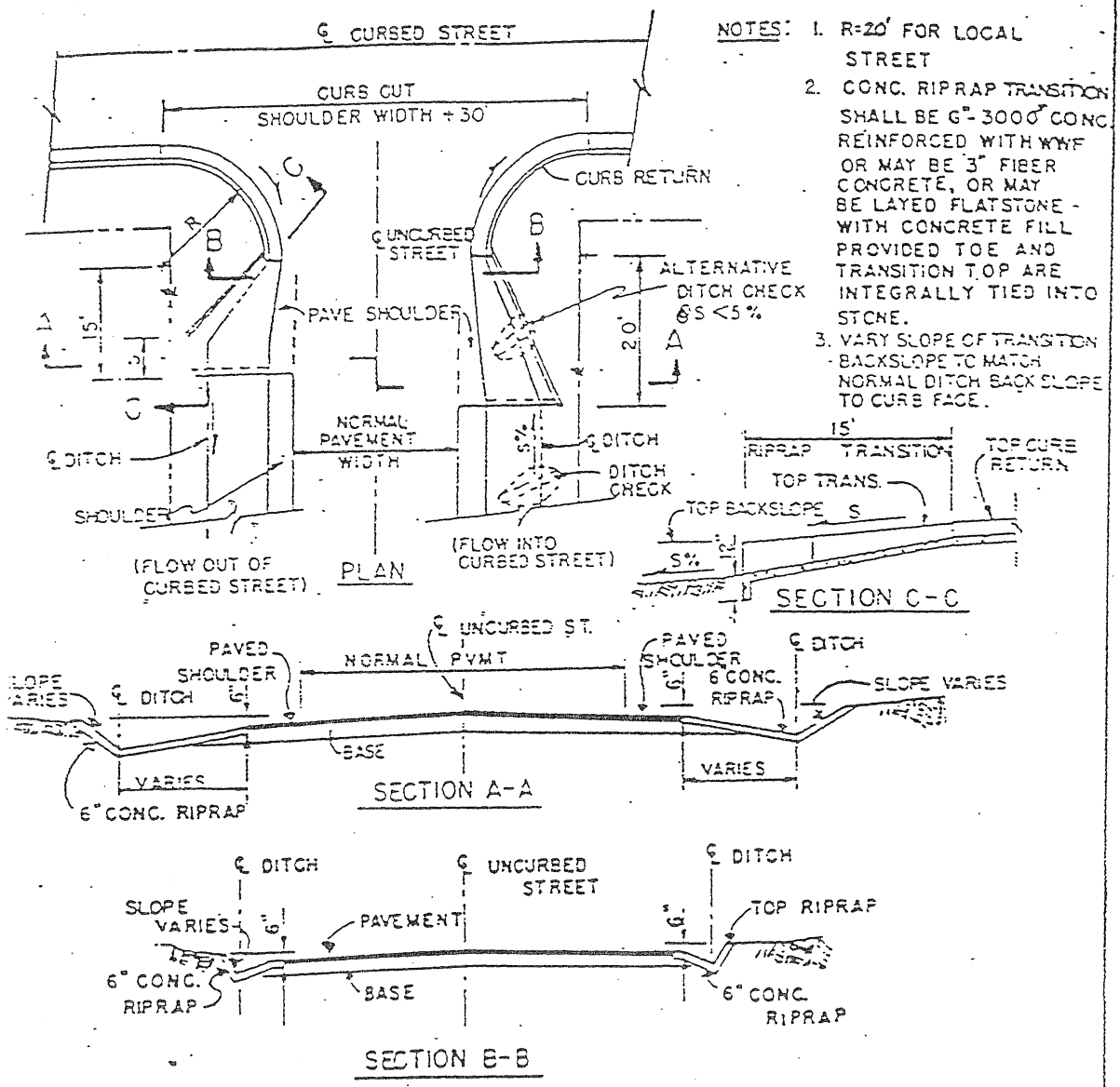

NOTES:
1. R=20' FOR LOCAL STREET
2. CONC. RIPRAP TRANSITION SHALL BE 6"-3000# CONC REINFORCED WITH WWF OR MAY BE 3" FIBER CONCRETE, OR MAY BE LAYED FLATSTONE - WITH CONCRETE FILL PROVIDED TOE AND TRANSITION TOP ARE INTEGRALLY TIED INTO STONE.
3. VARY SLOPE OF TRANSITION - BACKSLOPE TO MATCH NORMAL DITCH BACK SLOPE TO CURB FACE.

UNCURBED STREET-CURBED STREET INTERSECTION

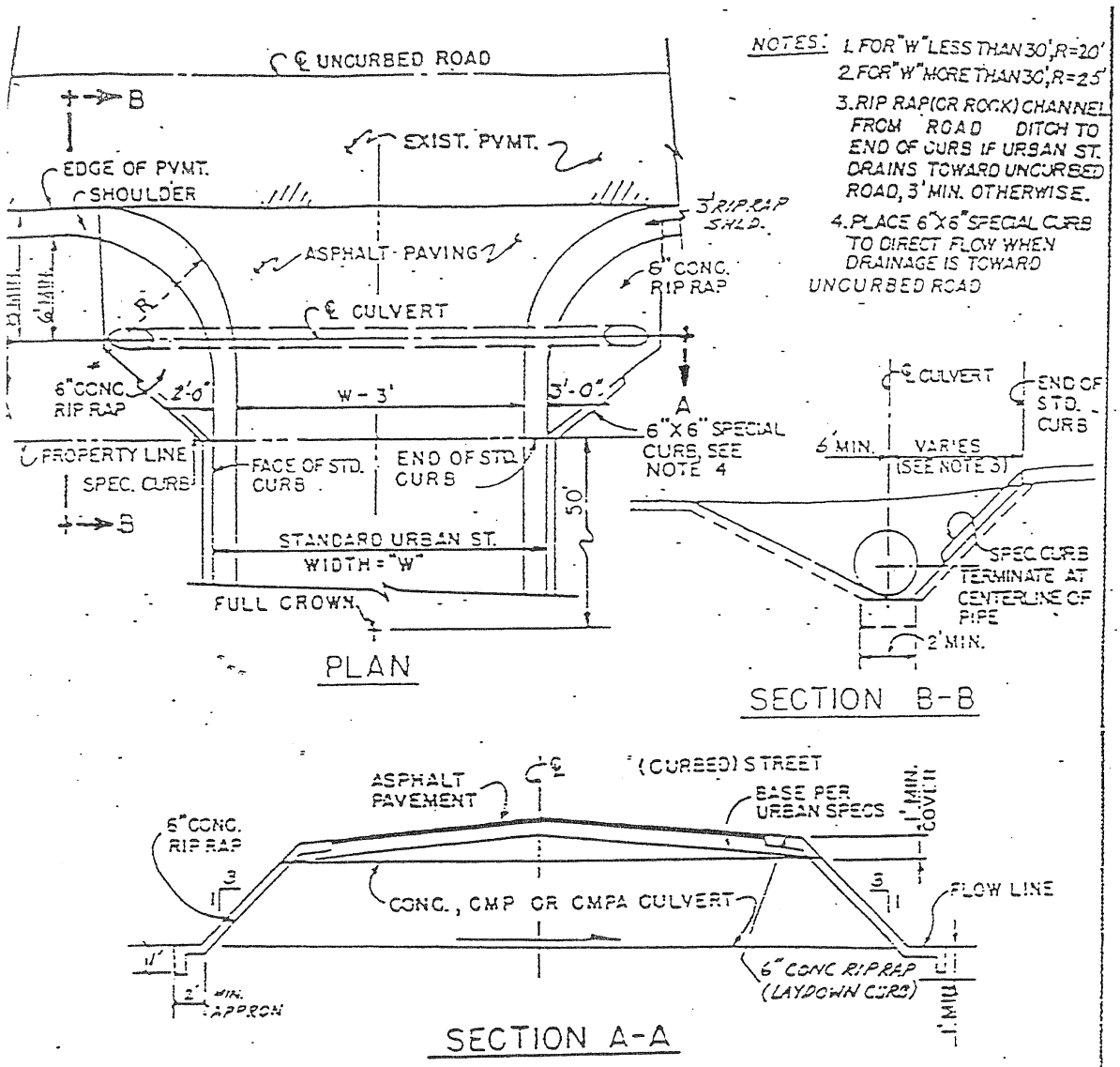

CURBED STREET-UNCURBED STREET INTERSECTION

TYPICAL DETAILS-PIPE SIZE TO 30" DIA. (31" RISE)

(FOR LARGER PIPE SPECIAL SECTIONS MAY BE NECESSARY)

APPENDIX G

WILLIAMSON COUTNY ON-SITE WASTE DISPOSAL SYSTEM REGULATIONS FOR SUBDIVISIONS

Please refer to "Regulations Governing On-Site Sewage Disposal Systems of the Williamson County Department of Sewage Disposal Management". Effective Date of September 1, 2000 and as amended.