ACTIVITY: Sediment Traps

WTCP-04

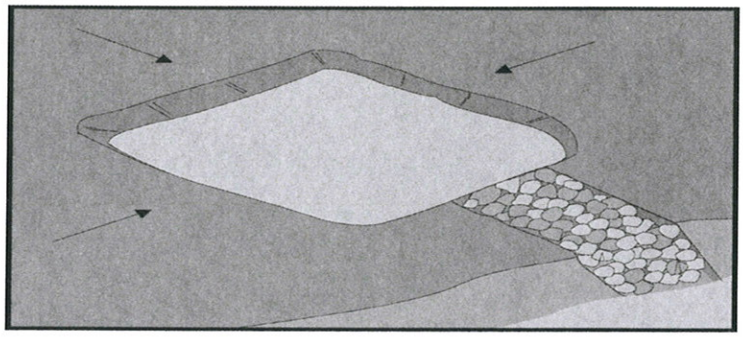

Targeted Constituents				
● Significant Benefit		◗ Partial Benefit		○ Low or Unknown Benefit
● Sediment	○ Heavy Metals	● Floatable Materials	○ Oxygen Demanding Substances	
○ Nutrients	○ Toxic Materials	○ Oil & Grease	○ Bacteria & Viruses	○ Construction Wastes

Implementation Requirements				
● High		◗ Medium		○ Low
○ Capital Costs	◗ O & M Costs	○ Maintenance	○ Suitability for Slopes >5%	○ Training

Description

A sediment trap is a small, excavated or bermed area where runoff from small tributary areas is detained and sediment can settle. This management practice is likely to significantly reduce sediment and floatable materials.

Suitable Applications

- Any disturbed area less than 5 acres (2 ha).
- Install detention as first step in site clearing process. Use for temporary construction. Then re-establish and maintain after site is stabilized.
- Along the perimeter of the site at locations where sediment-laden runoff is discharged off-site.
- Around and/or upslope from storm drain inlet protection measures.
- At any point within the site where sediment-laden runoff can exit the site or enter stabilized areas or waterways.
- In place of sediment basins, only when the contributing drainage area is divided into smaller subareas contributing to each trap.

Installation/ Application Criteria

- A sediment trap is a small temporary ponding area, usually with a gravel outlet and filter fabric, formed by excavation and/or by constructing an earthen embankment. Its purpose is to collect and store sediment from sites cleared and/or graded during construction. It is intended for use on small tributary areas, with no unusual drainage features, and projected for a quick build-out time. It should help in removing coarse sediment from runoff. The trap is a temporary measure with a design life of approximately 6 months, and is to be maintained until the site area is permanently protected against erosion by vegetation and/or structures.
- Construct sediment traps prior to construction activities. Plan for 100-year, 24-

hour flow from upstream area.

- Trap shall be located: (1) by excavating a suitable area or where a low embankment can be constructed across a swale, (2) where failure would not cause loss of life or property damage, and (3) to provide access for maintenance, including sediment removal and sediment stockpiling in a protected area.

- Build outside the area to be graded before clearing, grubbing, and grading begin.

- Trap size depends on the type of soil, size of the drainage area, and desired sediment removal efficiency.

- Restrict basin side slopes to 4:1 (H:V) or flatter.

- The larger the trap, the less frequently sediment must be removed, but a larger volume will need to be removed.

- The outlet of the trap must be stabilized with rock, geotextile, vegetation, or another suitable material to prevent erosion.

- A stable emergency spillway must be installed to safely convey stormwater runoff for events larger than the 10-year storm event.

- Sediment trap size depends on the type of soil, size of the drainage area, and desired sediment removal efficiency. As a rule of thumb, the larger the basin volume the greater the sediment removal efficiency. The runoff volume from a two-year, 24-hour storm is a common design criterion for a sedimentation trap.

- Traps shall be sized to accommodate a settling zone and sediment storage zone with recommended minimum volumes of at least 134 yd^3/ac and 45 yd^3/ac (256 m^3/ha and 86 m^3/ha) of contributing drainage area, respectively, based on 1.0 in. (2.54 cm) of runoff volume over a 24-hr period. Multiple traps and/or additional volume may be required to accommodate site specific soil conditions.

- Trap inlets should be located to maximize the travel distance to the trap outlet. Trap length to width ratio shall be greater than 3:1 (L:W) or baffles are required to prevent short-circuiting of the inlet flow.

- Baffles shall be constructed of 4 in. x 4 in. (10.2 cm x 10.2 cm) posts and 4 ft. x 8 ft. x 0.5 in. (1.26 m x 2.51 m x 1.3 cm) exterior plywood. Posts shall be set at least 3 ft. (0.9 m) into the ground, no further apart than 8 ft. (2.5 m) center to center, and shall reach a height of 6 inches (15.2 cm) below the riser crest elevation.

- To dewater the trap, the outlet should be constructed in one of the following three ways:

  (1) Use a triangular shaped filter dike (see Figure WTCP-04-1) or check dam (see WTCP-08).

  (2) Use corrugated metal or reinforced concrete riser pipe with dewatering holes encased in gravel to prevent floating debris from flowing out of the

trap or clogging the system. See Figure WTCP-04-2. This method is usually applied for larger sediment traps (serving 4 or more acres) or temporary sediment detention basins.

- Top two-thirds of the riser shall be perforated with 0.5 in (1.3 cm) diameter holes spaced 8 in. (20.3 cm) vertically and 10 in. to 12 in. (25.4 cm to 30.5 cm) horizontally.
- Structure shall be placed on a firm, smooth foundation with the base securely anchored with concrete or other means to prevent floatation.
- Securely attach to the riser pipe (watertight connection) a horizontal pipe (barrel) which extends through the embankment to the toe of fill.

(3) Construct a crushed stone outlet section of the embankment at the low point of the trap. The stone section serves as a nonerosive spillway outlet for flood flows and the bottom section provides a means of dewatering the trap between rainfall events. See Figure WTCP-04-3.

Maintenance

- Inspect sediment traps weekly, before and after rainfall events. During extended rainfall events, inspect sediment traps daily during construction.
- Examine trap banks for seepage and structural soundness.
- Check outlet structure and spillway for any damage or obstructions. Repair damage and remove obstructions as needed.
- Check outlet area for erosion and stabilize, if required.
- Remove accumulated sediment when the volume has reached one-third the original trap volume. Properly dispose of sediment and debris removed from the trap.

Limitations

- Only use for drainage areas up to 5 acres (2 ha)(see Sediment Detention Basin WP-03 for larger areas).
- Not to be located in live streams.
- Requires surface areas of 3 to 5 percent of the tributary area to permit settling of sediment.
- Only removes large and medium sized particles and requires upstream erosion control.
- Can be attractive and dangerous to children. Protective fencing for the site is recommended.

Additional Information

Sediment traps should be used only for small drainage areas. If the contributing drainage area is greater than 5 acres (2 ha), use a sediment basin or subdivide the catchment area into smaller drainage basins.

Sediment usually must be removed from the trap after each rainfall event. The Stormwater Pollution Prevention Program for the site should detail how this sediment is to be disposed of, such as for in fill areas on-site, or removal to an approved off-site

dump. Sediment traps used as a perimeter control should be installed before any land disturbance takes place in the tributary area.

Sediment traps can be constructed by excavating a depression in the ground or creating an impoundment with a barrier or low-head dam. Sediment traps should be installed outside the area being graded and should be built prior to the start of the grading activities or removal of vegetation. To minimize the area disturbed by them, sediment traps should be installed in natural depressions or in small swales or drainageways. The following are additional typical installation criteria.

1. The area under the embankment must be cleared, grubbed, and stripped of any vegetation and root mat. The pool area should be cleared.
2. The fill material for the embankment must be free of roots or other woody vegetation as well as oversized stones, rocks, organic material, or other objectionable material. The embankment may be compacted by traversing with equipment while it is being constructed.
3. When a riser is used, all pipe joints must be watertight.
4. When an earth or stone outlet is used, the outlet crest elevation should be at least 1 foot below the top of the embankment.
5. When a crushed stone outlet is used, the crushed stone used in the outlet should meet AASHTO M43, size No. 2 or 24, or its equivalent such as MSHA No. 2. Gravel meeting the above gradation may be used if crushed stone is not available.
6. If the trap is to be removed, the area must be properly stabilized including the upslope tributary area. If the trap is to be used as a permanent detention facility, then remove any sediment required to achieve the needed volume and clean or reset the outlet structure.

Primary References

California Storm Water Best Management Practice Handbooks, CDM et.al. for the California SWQTF, 1993.

Caltrans Storm Water Quality Handbooks, CDM et.al. for the California Department of Transportation, 1997.

Subordinate References

Best Management Practices and Erosion Control Manual for Construction Sites, Flood Control District of Maricopa County, Rough Draft - July 1992.

"Draft – Sedimentation and Erosion Control, An Inventory of Current Practices", U.S.E.P.A., April, 1990.

"Environmental Criteria Manual", City of Austin, Texas.

Manual of Standards of Erosion and Sediment Control Measures, Association of Bay Area Governments, June 1981.

Proposed Guidance Specifying Management Measures for Sources of Nonpoint Pollution in Coastal Waters, Work Group Working Paper, USEPA, April, 1992.

Stormwater Management Water for the Puget Sound Basin, Washington State Department of Ecology, The Technical Manual – February 1992, Publication #91-75.

Water Quality Management Plan for the Lake Tahoe Region, Volume II, Handbook of Management Practices, Tahoe Regional Planning Agency – November 1988.

Inspection Checklist

- Has this management practice been constructed to serve no more than 5 acres (2 ha)?
- Does the outlet structure use a triangular shaped filter dike, riser pipe or stone outlet designed to convey flows up to the 10-year storm event?
- Is the outlet structure stabilized to prevent erosion?
- Is there a gage indicating the depth of the trap?
- Has sediment accumulated beyond ⅓ the depth?
- If the trap failed, would it result in loss of life, damage to home or buildings, or interruption in the use of public roads or utilities?
- Is the trap protected from access by children?
- Is the outlet structure clogged?
- Are there any signs of seeping through or erosion of the low embankment?
- Is an overflow structure present that can convey flows beyond the 10-year storm event?

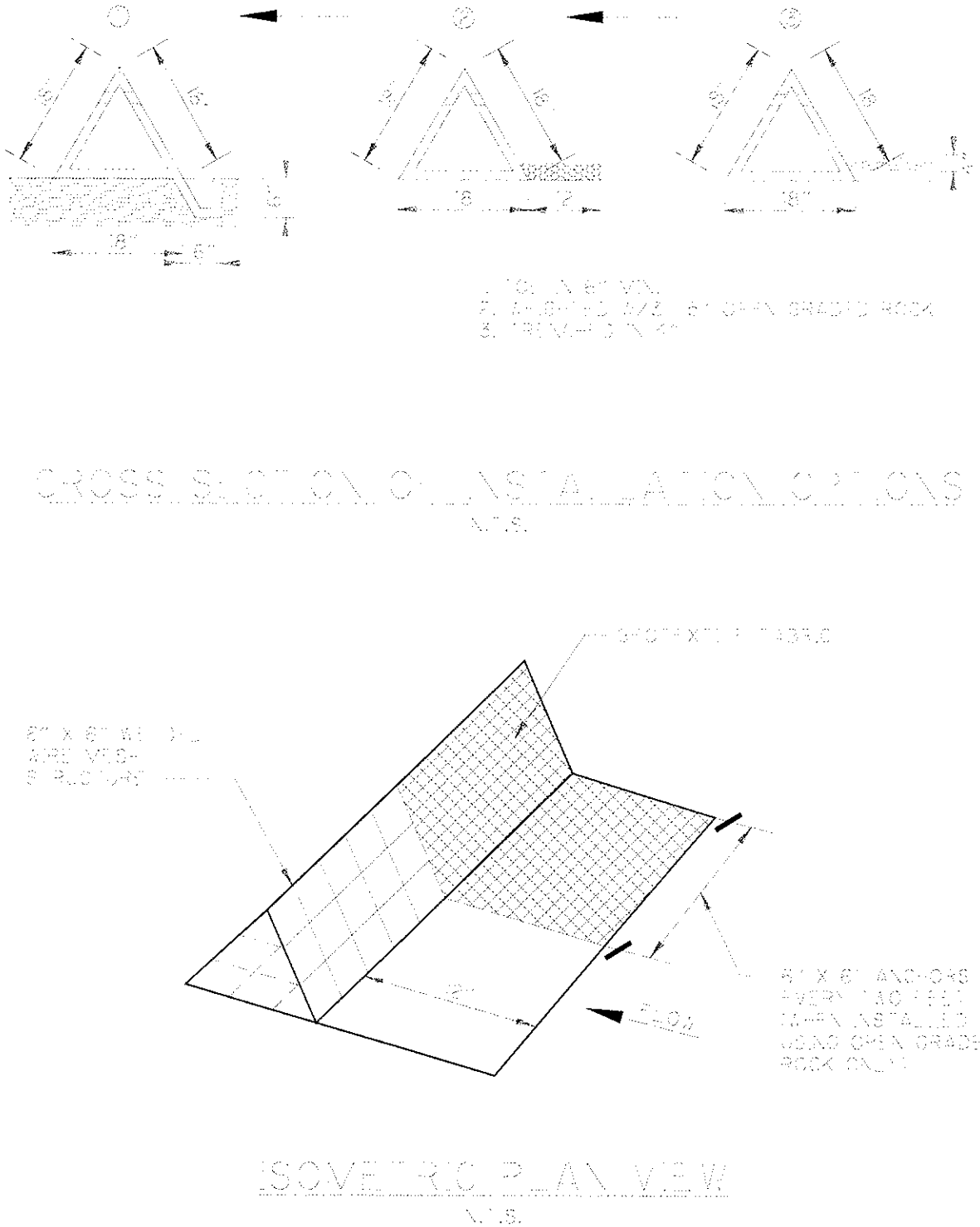

Figure WTCP-05-1
Sediment Trap – Filter Dike

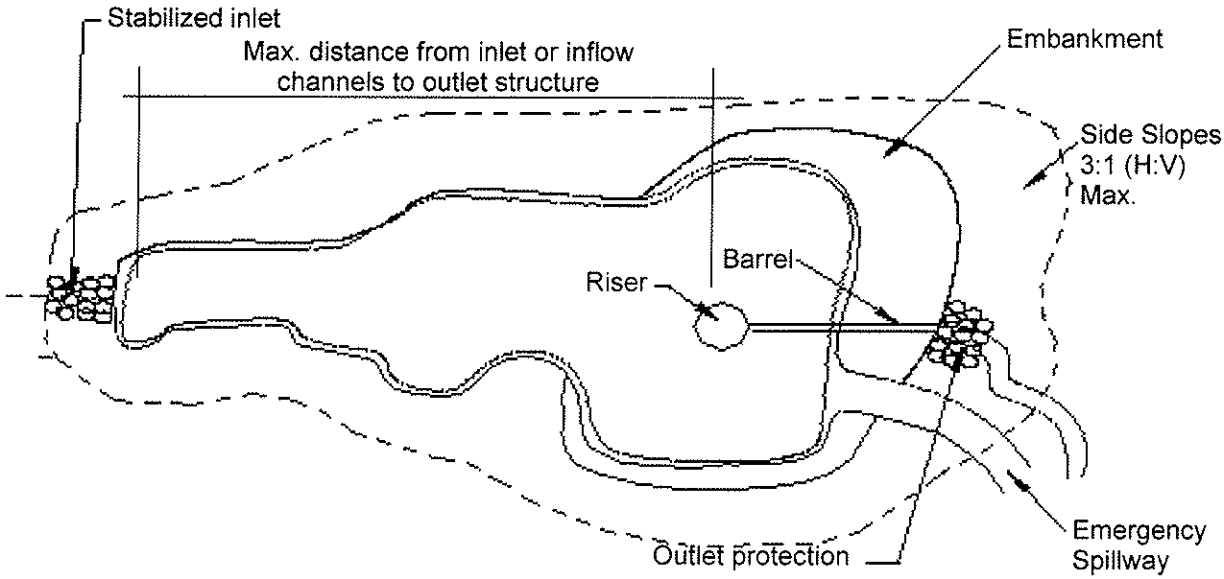

TOP VIEW

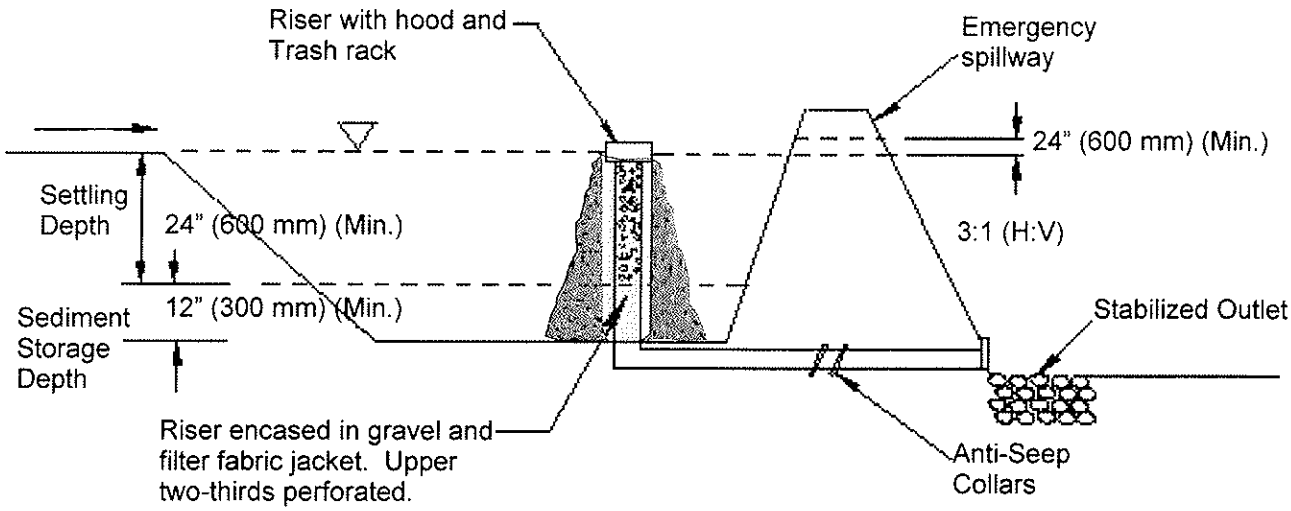

NOTES:

1. Typical trap design shown will handle 1.0" (25.4 mm) of runoff over a 24-hour period.
2. Settling volume: at least 134 yd^3 per acre of tributary area.
3. Sediment storage volume: at least 45 yd^3 per acre of tributary area.
4. This outlet provides partial draining of pool. For temporary sediment basins, rock encasement around the riser may not be necessary, however, filter fabric must then be fastened around the riser using either staples or other manufactured fasteners.
5. The mechanism shown in this figure is usually applied to areas of 4 or more acres.

Figure WTCP-04-2
Sediment Trap with Riser Pipe Outlet

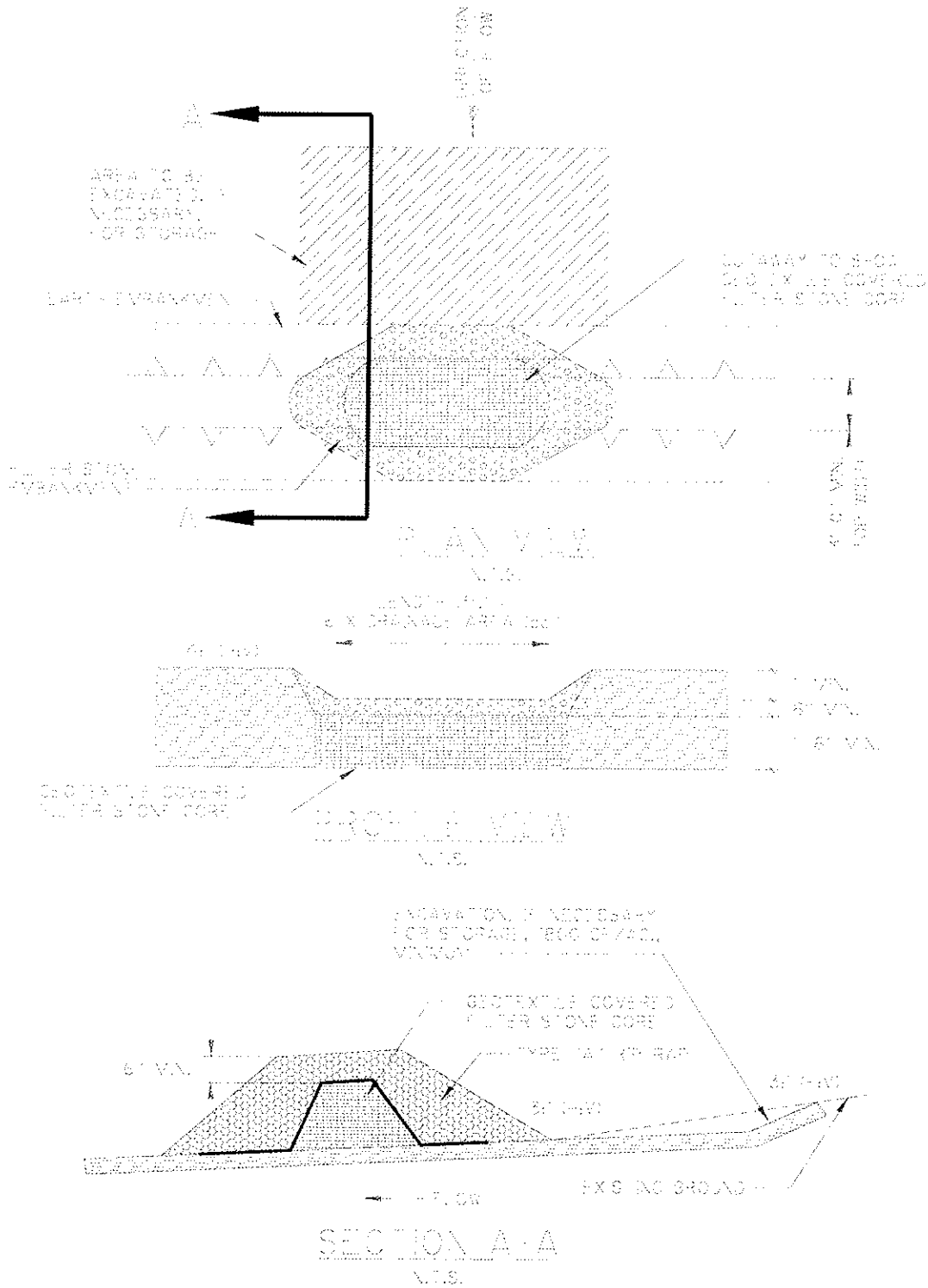

Figure WTCP-04-3
Sediment Trap with Stone Outlet