FAN SCHEDULE

TAG	SERVICE	AREA SERVED	MANUFACTURER & MODEL #	CFM	S.P.	FAN TYPE	DISCHARGE	MOTOR RPM	FAN RPM	DRIVE TYPE	MOTOR PULLEY	DRIVE LOSS	BEARINGS W/ GREASE FITTINGS	OPERATING POWER	WEIGHT W/O ACC	WEIGHT W/ACC	ELECTRICAL DATA HP/W	ELECTRICAL DATA VOLT/PH	NOTES
EF-1	EXHAUST	50-METER POOL PURGE ONLY	GREENHECK CUBE-101-5	1000	0.75"	CENTRIFUGAL UTILITY BACKWARD INCLINED WHEEL	UPBLAST	1725	1710	BELT	ADJUSTABLE	5.0%	L10 100,000 HRS.	0.50 HP	74 LBS	86 LBS	0.5 HP	480/3ø	1-14
EF-2	EXHAUST	50-METER POOL NORMAL OPERATIONS	GREENHECK CUBE-240-30	6000	1.00"	CENTRIFUGAL UTILITY BACKWARD INCLINED WHEEL	UPBLAST	1725	929	BELT	ADJUSTABLE	5.0%	L10 100,000 HRS.	2.13 HP	182 LBS	201 LBS	3.0 HP	480/3ø	1-14
EF-3	EXHAUST	50-METER POOL NORMAL OPERATIONS	GREENHECK CUBE-240-30	6000	1.00"	CENTRIFUGAL UTILITY BACKWARD INCLINED WHEEL	UPBLAST	1725	929	BELT	ADJUSTABLE	5.0%	L10 100,000 HRS.	2.13 HP	182 LBS	201 LBS	3.0 HP	480/3ø	1-14
EF-4	EXHAUST	PUMP ROOM	SOLER-PALAU TD315	600	0.75"	INLINE MIXED FLOW IMPELLER	INLINE	2500	MFR	DIRECT	N/A	N/A	L10 100,000 HRS.	335 WATTS	31 LBS	31 LBS	335 WATTS	115/1ø	A-J

EF-1 – EF-3 NOTES:
1. COATED WITH HI-PRO POLYESTER, CONCRETE-GREY-RAL 7023, FAN AND ATTACHED ACCESSORIES
2. UL/CUL-705 – POWER VENTILATORS
3. MOTOR AND DRIVES ISOLATED ON SHOCK MOUNTS
4. DISCONNECT BY E.C.
5. MC SHALL INCLUDE IN HIS PRICE DRIVE & PULLEY CHANGES REQUIRED TO MEET THE SPECIFIED AIR FLOWS
6. MOTOR IS VFD RATED
7. PROVIDE COMPATIBLE VFD FOR FAN START AND TO REGULATE THE FAN SPEED.
8. PROVIDE WITH COATED BACKDRAFT DAMPER – FOR EF-1: WD-100-PB-12x12, FOR EF-2 & EF-3: WD-100-PB-24x24
9. ALUMINUM BIRDSCREEN
10. HOOD HASPS
11. TIE DOWN POINTS
12. STAINLESS STEEL FASTENERS
13. STAINLESS STEEL SHAFT
14. FAN SHALL BE INTERLOCKED WITH THE EXISTING DECTRON SWIMMING POOL DEHUMIDIFICATION UNITS AND EXISTING AAON OUTSIDE AIR UNIT TO ONLY OPERATE TOGETHER IN NORMAL OPERATION.
15. FAN EF-1 OPERATES ONLY WHEN THE SYSTEM IS IN THE PURGE MODES. EF-2 AND EF-3 OPERATE DURING NORMAL OPERATION, MANUAL OPERATION, AND ALSO DURING THE PURGE MODES.

EF-4 NOTES:
A. DISCONNECT BY E.C.
B. METAL CASING WITH EPOXY-POLYESTER PAINT COATING
C. EPOXY-POLYESTER COATED METAL FAN DUCT CONNECTION FLANGES
D. ALUMINUM IMPELLER BLADES
E. MOTOR SUITABLE FOR SPEED CONTROL
F. THERMAL OVERLOAD PROTECTION
G. PERMANENTLY LUBRICATED BALL BEARINGS
H. CLASS B MOTOR INSULATION
I. PROVIDE WITH VARI-SPEED CONTROLLER SCR-10
J. PROVIDE WITH "MCA" BACKDRAFT DAMPER

DIFFUSER SCHEDULE

TAG	SERVICE	CFM	NECK SIZE	FRAME TYPE	PATTERN	DAMPER	MATERIAL	FINISH	MFG & MODEL No.	TYPE	NOTES
A	SUPPLY	AS NOTED	AS NOTED	SURFACE	SINGLE VANES	YES	ALUMINUM	NOTE 2	NAILOR MODEL 45DL1	SINGLE VANE DRUM LOUVER	1

NOTES:
1. DIFFUSER DESIGNATIONS ON PLANS AS FOLLOWS: DIFFUSER OR NECK SIZE 12x12; AIR QUANTITY 333; DIFFUSER TYPE AS NOTED ABOVE (C)
2. PAINT TO MATCH EXISTING

LEGEND

- SUPPLY DIFFUSER (NEW)
- RETURN GRILLE (NEW)
- SUPPLY DIFFUSER (FLOOR ABOVE)
- RETURN GRILLE (FLOOR ABOVE)
- RA TRANSFER GRILLE (10x10)
- EF-1 EXHAUST FAN
- T THERMOSTAT 4'-0" A.F.F.
- R REMOTE TEMPERATURE SENSOR
- C CARBON DIOXIDE SENSOR
- S SWITCH
- RECTANGULAR DUCT
- FLEXIBLE DUCT
- ROUND RIGID DUCT
- TURNING VANES
- FPB-2-1 FAN POWERED (PARALLEL) VAV BOX
- EXISTING DUCT TO BE REMOVED
- VD VOLUME DAMPER
- BDD BACKDRAFT DAMPER
- SD SPLITTER DAMPER
- FD FIRE DAMPER WITH 8x8 ACCESS DOOR
- — C — CONDENSATE PIPING
- S DUCT-MOUNTED SMOKE DETECTOR

AFF	ABOVE FINISHED FLOOR
CU	CONDENSING UNIT
DF	DUCT FURNACE
AFF	ABOVE FINISHED FLOOR
AHU	AIR HANDLING UNIT
CC	COOLING COIL
CFM	CUBIC FEET PER MINUTE
EA	EXHAUST AIR
HP	HEAT PUMP
PH	PERIMETER HEAT
RA	RETURN AIR
RTU	ROOFTOP UNIT (PACKAGED)
SA	SUPPLY AIR
SP	STATIC PRESSURE
VAV	VARIABLE AIR VOLUME
	DOOR UNDER CUT 3/4"
	DOOR LOUVER
	CONNECT NEW TO EXISTING
	POINT OF DEMLOITION

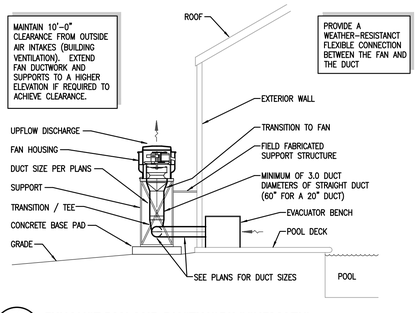

1 / M1 **EXHAUST FAN AND DUCTWORK SCHEMATIC**
NOT TO SCALE

HVAC GENERAL NOTES

1. FURNISH ALL LABOR, MATERIAL AND EQUIPMENT REQUIRED FOR THE COMPLETE INSTALLATION AND OPERATION OF ALL SYSTEMS IN THIS SECTION OF WORK IN ACCORDANCE WITH RECOMMENDED PRACTICE AND ALL APPLICABLE CODES.
2. DO NOT SCALE DRAWINGS. SEE ARCHITECTURAL DRAWINGS & REFLECTED CEILING PLANS FOR EXACT LOCATION OF DOORS, WINDOWS, CEILING DIFFUSERS, ETC.
3. ALL MECHANICAL PERMITS AND INSPECTION FEES SHALL BE OBTAINED AND PAID FOR BY THE MECHANICAL CONTRACTOR.
4. MECHANICAL CONTRACTOR SHALL GUARANTEE ALL WORK AND MATERIALS FOR ONE YEAR, EFFECTIVE THE DAY THE PROJECT IS ACCEPTED BY THE OWNER. REFRIGERANT COMPRESSORS SHALL BE GUARANTEED FOR FIVE YEARS.
5. DRAWINGS ARE DIAGRAMMATIC AND MAY NOT SHOW ALL REQUIRED FITTINGS. CONTRACTOR IS RESPONSIBLE FOR COORDINATING THE TYPE, SIZE AND LOCATION OF ALL AIR DEVICES, DUCTWORK, PIPING AND EQUIPMENT WITH THE CEILING PLAN, LIGHTS, STRUCTURAL ELEMENTS AND OTHER TRADES. CONTRACTOR TO FURNISH AND INSTALL ALL BENDS, OFFSETS, ELBOWS, ETC. AS REQUIRED. VERIFY ALL CLEARANCES PRIOR TO FABRICATING DUCTWORK OR ORDERING EQUIPMENT.
6. CONTRACTOR IS RESPONSIBLE FOR PROVIDING MATERIALS AND INSTALLING THE WORK IN ACCORDANCE WITH ALL APPLICABLE LOCAL, STATE AND NATIONAL CODES AND STANDARDS.
7. DUCTWORK
   - A. ALL RECTANGULAR AND ROUND DUCTWORK SHALL BE COATED GALVANIZED SHEET METAL, OR PVC, CONSTRUCTED IN ACCORDANCE WITH SMACNA STANDARDS WITH A MINIMUM PRESSURE CLASSIFICATION OF 2", SEAL CLASS C, WITH A MAXIMUM LEAKAGE RATE OF 5%.
   - B. ALL SQUARE ELBOWS (IF USED) SHALL HAVE TURNING VANES.
   - C. ALL DUCT DIMENSIONS SHOWN ARE INTERIOR CLEAR DIMENSIONS.
   - D. PROVIDE A MANUAL BALANCING DAMPER WHERE SHOWN ON THE PLANS.
   - E. ALL DUCT SYSTEMS ARE TO BE PER U.L. STANDARDS. DUCTS ARE TO BE INSTALLED WITH NO RESTRICTIONS AND AN ABSOLUTE MINIMUM AMOUNT OF AIR LEAKAGE – IN NO CIRCUMSTANCE SHALL THERE BE MORE LEAKAGE THAN ALLOWED BY THE ENERGY CODE.
   - F. ALL DUCTS SHALL BE SUPPORTED PER SMACNA STANDARDS.
10. ALL PIPING, DUCTS, VENTS, ETC., EXTENDING THROUGH WALLS & ROOF SHALL BE FLASHED & COUNTER-FLASHED IN A WATERPROOF MANNER.
11. LOCATE ALL THERMOSTATS AND SWITCHES 4'-6" ABOVE FINISHED FLOOR. FURNISH A THERMOSTAT FOR EVERY DEVICE REQUIRING ONE WHETHER SHOWN ON DRAWINGS OR NOT.
12. ALL EQUIPMENT SHALL BE INSTALLED PER CODE & MANUFACTURER'S REQUIREMENTS FOR SERVICE AND ACCESS CLEARANCES.
13. ALL EQUIPMENT SHALL BE U.L LISTED.
14. MECHANICAL CONTRACTOR SHALL BALANCE SYSTEM TO AIR QUANTITIES INDICATED ON PLANS AND PROVIDE A COMPETE BALANCING REPORT IN ACCORDANCE WITH NEBB OR AABC STANDARDS.
15. ALL CONTROL WIRING SHALL BE BY MECHANICAL CONTRACTOR.
16. MAINTAIN A MINIMUM 10'-0" BETWEEN OUTDOOR AIR INTAKES AND EXHAUST FAN DISCHARGE AND PLUMBING VENTS, ETC. – FIELD COORDINATE.
17. CONCRETE PADS UNDER GROUND MOUNTED OUTDOOR HVAC UNITS SHALL BE 4" THICK REINFORCED WITH 6x6 10/10 WIRE MESH BY MECHANICAL CONTRACTOR, UNLESS NOTED OTHERWISE. PADS SHALL BE MINIMUM 6" LARGER THAN UNIT ON ALL SIDES. COORDINATE PAD LOCATIONS WITH GENERAL CONTRACTOR TO VERIFY KEY LOCATIONS.
18. ALL EQUIPMENT SHALL BE LABELED ACCORDING TO NUMBERING / IDENTIFICATION SYSTEM PER PLANS.
19. MECHANICAL CONTRACTOR SHALL PROVIDE U.L. LISTED FIRE DAMPERS WHERE REQUIRED FOR FIRE PROTECTION AS REQUIRED BY LOCAL CODES.
20. ELECTRICAL CONTRACTOR TO PROVIDE ALL HIGH VOLTAGE ELECTRICAL WIRING, CONDUIT, DISCONNECT SWITCHES, FUSES, ETC. TO CONDENSING UNITS AND AIR HANDLERS. ALL FINAL ELECTRICAL CONNECTIONS ARE BY ELECTRICAL CONTRACTOR.
21. PRIOR TO THE START OF INSTALLATION WORK, THE MECHANICAL CONTRACTOR SHALL NOTIFY THE OWNER'S REPRESENTATIVE, ARCHITECT, OR ENGINEER OF CONFLICTS UNFORESEEN DURING DESIGN BETWEEN THE MECHANICAL SYSTEM COMPONENTS AND OTHER BUILDING SYSTEMS.
22. INSTALLATION OF ANY EQUIPMENT SHALL BE IN ACCORDANCE WITH APPROVED SHOP DRAWINGS. CONTRACTOR TO COORDINATE THE SHOP DRAWING INFORMATION WITH ALL OTHER TRADES. (EXAMPLE ROOFTOP UNITS PHYSICAL SIZE AND WEIGHT MUST BE COORDINATED WITH STRUCTURAL SYSTEMS THRU GENERAL CONTRACTOR, LIKEWISE ALL ELECTRICAL CHARACTERISTICS WILL REQUIRE COORDINATION THRU GENERAL CONTRACTOR WITH ELECTRICAL CONTRACTOR).
23. MC SHALL COORDINATE DUCTWORK AND OTHER HVAC SYSTEM COMPONENTS WITH OTHER TRADES TO AVOID CONFLICTS.
24. ALL CUTTING, PATCHING OF SLAB, ROOF OR OTHER BUILDING COMPONENTS TO BE BY THE GENERAL CONTRACTOR.
25. INSTALL DAMPERS WHERE DUCTS PASS THROUGH RATED FLOORS AND WALLS WHETHER INDICATED ON THE PLANS OR NOT. MC SHALL COORDINATE INSTALLATION OF DUCTWORK WITH THE ARCHITECTURAL WALL AND FLOOR TYPES, USING THE ARCHITECTURAL PLANS TO LOCATE PROTECTED WALLS AND CEILING/FLOOR ASSEMBLIES.
26. INSTALL NEW EQUIPMENT IN A MANNER THAT DOES NOT OBSTRUCT EXISTING EQUIPMENT, OR CLEARANCES FOR MAINTENANCE AND PROPER OPERATION.

NOMINAL AIR BALANCES: 50-METER POOL

EXISTING CONDITIONS HVAC UNIT BALANCE

UNIT	SUPPLY	OUTSIDE AIR	RETURN	BALANCE
DH-1	37,700	10,100	27,600	0
DH-2	37,700	0	37,700	0
TOTALS	75,400	10,100	65,300	0

NOTE:
OUTSIDE AIR IS SUPPLIED BY AN EXISTING AAON UNIT TO THE MECHANICAL ROOM WHERE POOL DEHUMIDIFICATION UNIT DH-1 IS LOCATED. UNIT DH-1 DRAWS IN THE AIR SUPPLIED FROM THE AAON OUTSIDE AIR UNIT AND SUPPLIES IT TO THE NATATORIUM IN THE SUPPLY AIR STREAM.

NEW CONFIGURATION PURGE MODE

UNIT	SUPPLY	EXHAUST	RETURN	RELIEF	BALANCE
DH-1	37,700	0	27,600	0	10,100
DH-2	37,700	0	36,500	0	0
EF-1		-1,000			-1,000
EF-2		-6,000			-6,000
EF-3		-6,000			-6,000
EF-4		-600			-600
X-EF1		0			0
X-EF2		-200			-200
TOTALS	75,400	-13,800	-64,100	0	-2500

NOTE:
AIR FLOWS LISTED FOR EF-1, EF-2, AND EF-3, ARE FULL FLOW (PURGE MODE). AIR FLOWS FOR EF-4 AND X-EF2 ARE CONSTANT. DH-1 AND DH-2 SUPPLY AND RETURN AIR FLOWS SHALL BE BALANCED TO THE ABOVE AIR FLOWS.

THE EXISTING GREENHECK EXHAUST FAN X-EF1 MAY REMAIN IN PLACE, BUT WILL BE DISABLED SO THAT IT CANNOT OPERATE.

NEW CONFIGURATION NORMAL OPERATION

UNIT	SUPPLY	EXHAUST	RETURN	RELIEF	BALANCE
DH-1	37,700	0	27,600	0	10,100
DH-2	37,700	0	36,500	0	0
EF-1		0			0
EF-2		-5,500			-5,500
EF-3		-5,500			-5,500
EF-4		-600			-600
X-EF1		0			0
X-EF2		-200			-200
TOTALS	75,400	-11,800	-64,100	0	-500

NOTE:
AIR FLOWS LISTED FOR EF-2, AND EF-3, ARE PARTIAL FLOW (NORMAL OPERATION). AIR FLOWS FOR EF-4 AND X-EF2 ARE CONSTANT. DH-1 AND DH-2 SUPPLY AND RETURN AIR FLOWS SHALL BE BALANCED TO THE ABOVE AIR FLOWS. EF-1 IS OFF IN NORMAL OPERATION.

THE EXISTING GREENHECK EXHAUST FAN X-EF1 MAY REMAIN IN PLACE, BUT WILL BE DISABLED SO THAT IT CANNOT OPERATE.

NOTES:
THE NEW EXHAUST FANS EF-1, EF-2, AND EF-3 SHALL BE EQUIPPED WITH VARIABLE SPEED DRIVES TO START THE MOTORS AND PROVIDE THE ABILITY FOR THE MC/OPERATOR TO DIAL IN THE AIR FLOWS SPECIFIED.

THE SYSTEM WILL INITIALLY OPERATE STAND-ALONE. PROVIDE MANUAL CONTROLS TO ALLOW THE BUILDING OPERATORS TO SWITCH THE EVACUATOR FANS BETWEEN THE OFF, PURGE, AND NORMAL OPERATIONS SETTINGS. FANS EF-2 & EF-3 ALWAYS OPERATE TOGETHER. FAN EF-1 OPERATES ONLY IN PURGE MODE. SEE DIAGRAM THIS SHEET.

LOCATE THE CONTROLS IN STORAGE ROOM 113 OR IN ANOTHER LOCATION AS REQUIRED BY THE OWNER, BUT IN A LOCATION THAT IS NOT AS SUBJECT TO CORROSION AS THE AIR HANDLER OR POOL EQUIPMENT ROOMS.

FUTURE WORK WILL INVOLVE REPLACEMENT OF THE EXISTING POOL DEHUMIDIFIERS AND ASSOCIATED EQUIPMENT. AT THAT TIME CONTROL OF THE EVACUATOR FANS SHALL BE INCORPORATED INTO THE CONTROLS FOR THE ENTIRE HVAC SYSTEM. MC SHALL MAKE THE NECESSARY PROVISIONS NOW FOR THAT EVENTUALITY.

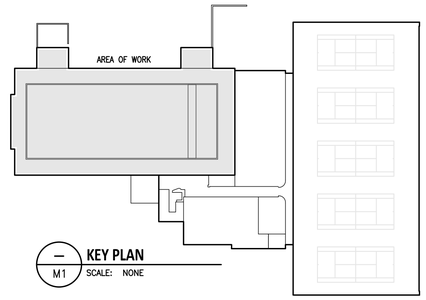

– / M1 **KEY PLAN**
SCALE: NONE

WARNING PLACARD

WARNING

PRIOR TO OPERATING THE EVACUATOR SYSTEM IN EITHER OF THE MANUAL SETTINGS, OPEN ALL EXTERIOR DOORS IN THE POOL AREA.

DOORS THAT LEAD TO OTHER (INTERIOR) AREAS OF THE BUILDING SHALL REMAIN CLOSED.

FAILURE TO DO SO MAY CAUSE DAMAGE TO THE EVACUATOR SYSTEM AND OR CREATE A SAFETY HAZARD IN THE BUILDING.

EVACUATOR SYSTEM MANUAL CONTROL

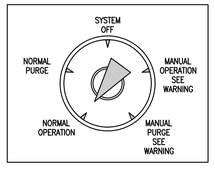

MC SHALL POST THE DESCRIPTION BELOW ON A PLACARD ADJACENT TO THE SELECTOR SWITCH:

POSITION 1 – NORMAL OPERATION
EVACUATOR FANS ARE INTERLOCKED WITH THE POOL DEHUMIDIFICATION UNITS (PDU's) SO THAT THEY RUN ONLY IF THE PDU'S ARE RUNNING, AND THEY EXHAUST 11,800 CFM.

POSITION 2 – NORMAL PURGE
EVACUATOR FANS ARE INTERLOCKED WITH THE PDU's SO THAT THEY RUN ONLY IF THE PDU'S ARE RUNNING, AND THEY EXHAUST 13,800 CFM.

POSITION 3 – SYSTEM OFF
EVACUATOR FANS ARE TURNED OFF.

POSITION 4 – MANUAL OPERATION
EVACUATOR FAN INTERLOCKS WITH THE PDU's ARE OVERRIDDEN, AND THE FANS EXHAUST 11,800 CFM. FOLLOW STEPS ON WARNING PLACARD PRIOR TO MANUAL OPERATION.

POSITION 5 – MANUAL PURGE
EVACUATOR FAN INTERLOCKS WITH THE PDU's ARE OVERRIDDEN, AND THE FANS EXHAUST 13,800 CFM. FOLLOW STEPS ON WARNING PLACARD PRIOR TO MANUAL PURGE.

SHULTZ ENGINEERING GROUP, PC
212 N. McDowell St, Suite 204
Charlotte, NC 28204
(P) 704.334.7363 (F) 704.347.0093
www.shultzeg.com
SEG - 15-055

WILLIAMS COUNTY INDOOR SPORTS COMPLEX INDOOR 50-METER SWIMMING POOL PADDOCK EVACUATOR FAN SYSTEM

ENGINEER'S SEAL
07/06/15

REV	DATE	DESCRIPTION

DATE: 06/22/2015
PROJECT NO.: 15-055.00
TITLE: MECHANICAL HVAC SCHEDULES, NOTES, AND DETAILS
DRAWING NO.: M1